CONTENTS

Mechanical Replacement Parts Rist & Exploded Views ····· PRT-1

Mechanical Chassis Assembly(1) ····· PRT-1

Mechanical Chassis Assembly(2) ····· PRT-3

Sub Chassis Assembly ····· PRT-5

Front Panel Assembly ····· PRT-7

Rear Panel Assembly ····· PRT-9

Casing Parts Assembly ····· PRT-11

Chassis Frame Assembly ····· PRT-13

Cassette Compartment Assembly ····· PRT-15

Packing Parts Assembly ····· PRT-17

Electrical Replacement Parts List ····· PRT-18

SERVICING FIXTURES & TOOLS

AJ-D850P

Ref. No.	Part No.	Part Name & Description	Pcs	Remarks
1	VFK1145	BACK TENSION METER	1	
2	VFK1149	POST DRIVER	1	
3	VFK71	DIAL TORQUE GAUGE (150G)	1	
4	VFK1191	DIAL TORQUE GAUGE (45G)	1	
5	VFK1152	DIAL TORQUE GAUGE ADAPTOR	1	
6	VFK0357	ECCENTORIC SCREWDRIVER	1	
7	VFL1154	POST HEIGHT FIXTURE	1	
8	VFK1153	MECH. NEUTRAL PLATE	1	
9	VFK0906	OIL	1	
10	VFK1155	REV POSITION TOOL	1	
11	VFK1156	PLAY POSITION TOOL	1	
12	VFK1208	NEUTRAL POSITION TOOL	1	
13	VFK1150	NUT DRIVER (5.5MM)	1	
14	VFK1151	NUT DRIVER (2.5MM)	1	
15	VFK1188	DIAL TENSION GAUGE (30G)	1	
16	VFK0948A	CHECK LIGHT	1	
17	VFK0749	FROIRAL GREASE	1	
18	MOR265	MORLYTONE GREASE	1	
19	VFK1146	PHILIPS DRIVER (FINE)	1	
20	VFK1147	PHILIPS DRIVER (FINE)	1	
21	VFK1148	HEX. DRIVER (1.5)	1	
22	VFK1178	HEX. DRIVER (0.89)	1	
23	VFK1179	HEX. DRIVER (0.71)	1	
24	VFK1190	HEX. WRENCH	1	
25	VFK1209	TORQUE DRIVER	1	
26	VFK1375	POST AXIS DRIVER (1.5MM)	1	
27	VFK1300	A/D BOARD	1	
28	VFM3580KM	ALIGNMENT TAPE (NO.1)	1	FOR NTSC
29	VFM3581KM	ALIGNMENT TAPE (NO.2)	1	FOR NTSC
30	VFM3582KM	ALIGNMENT TAPE (NO.3)	1	FOR NTSC
31	VFM3680KM	ALIGNMENT TAPE (NO.1)	1	FOR PAL
32	VFM3681KM	ALIGNMENT TAPE (NO.2)	1	FOR PAL
33	VFM3682KM	ALIGNMENT TAPE (NO.3)	1	FOR PAL
34	VFM3000EDS	ALIGNMENT TAPE (DV LISTA)	1	
35	VFM3010EDS	ALIGNMENT TAPE	1	
36	VFM3110EDS	ALIGNMENT TAPE	1	
37	AJ-CL12MP	CLEANING TAPE	1	
38	VFK1481	LISTA SOFTWARE	1	
39	VFK1186	LISTA CABLE	1	
40	VFK1423	TAPE DET. SENSOR CASSETTE	1	
41	VZZ0095	CLEANING CROSS	1	

Ref. No.	Part No.	Part Name & Description	Pcs	Remarks
42	VFK1248A	FLASH ROM VERSION UP SOFT	1	
43	VFK1304A	ROM REWRITER	1	
44	VFK1305	120P EXTENDER	1	
45	VFK1307	70P EXTENDER	1	
46	VFK1306	52P EXTENDER	1	
47	VFK0369	TWEEZERS	1	
48	VFK0371	RADIO PRIER	1	
49	VFK0372	CUTTER PRIER	1	
50	VFK0338	TRIMMER ADJUSTMENT DRIVER	1	
51	VFK0337	PHILIPS DRIVER	1	

Ref.No.	Part No.	Part Name & Description	Pcs	Remarks
▪ 1	VEM0686	S REEL MOTOR A ASS'Y	1	(M)
▪ 2	VEM0687	T REEL MOTOR A ASS'Y	1	(M)
3	VMS5923	REEL OUTER RAIL	2	
4	VMS5924	REEL INNER RAIL	2	
5	VXL2589	S BASE DRIVE ARM ASS'Y	1	
6	VMB2944	CHARGE SPRING	2	
7	VXL2590	T BASE DRIVE ARM ASS'Y	1	
8	VXA5625	SLIDE ROD ASS'Y	1	
9	VXL2597	M STOPPER DRIVE ARM ASS'Y	1	
9-1	VMB2955	M STOPPER SPRING (1)	1	
9-2	VMB3017	M STOPPER SPRING (2)	1	
10	VXA6174	L-M RELEASE ANGLE ASS'Y	1	
11	VXZ0439	S BRAKE ARM ASS'Y	1	
12	VXZ0440	T BRAKE ARM ASS'Y	1	
13	VMZ2603	REEL FLEX COVER	2	
31	VMX1061	WASHER	7	
32	VMX1079	CUT WASHER	2	
33	VMX1394	CUT WASHER	2	
34	XQN2+CF3	SCREW	4	

Ref.No.	Part No.	Part Name & Description	Pcs	Remarks

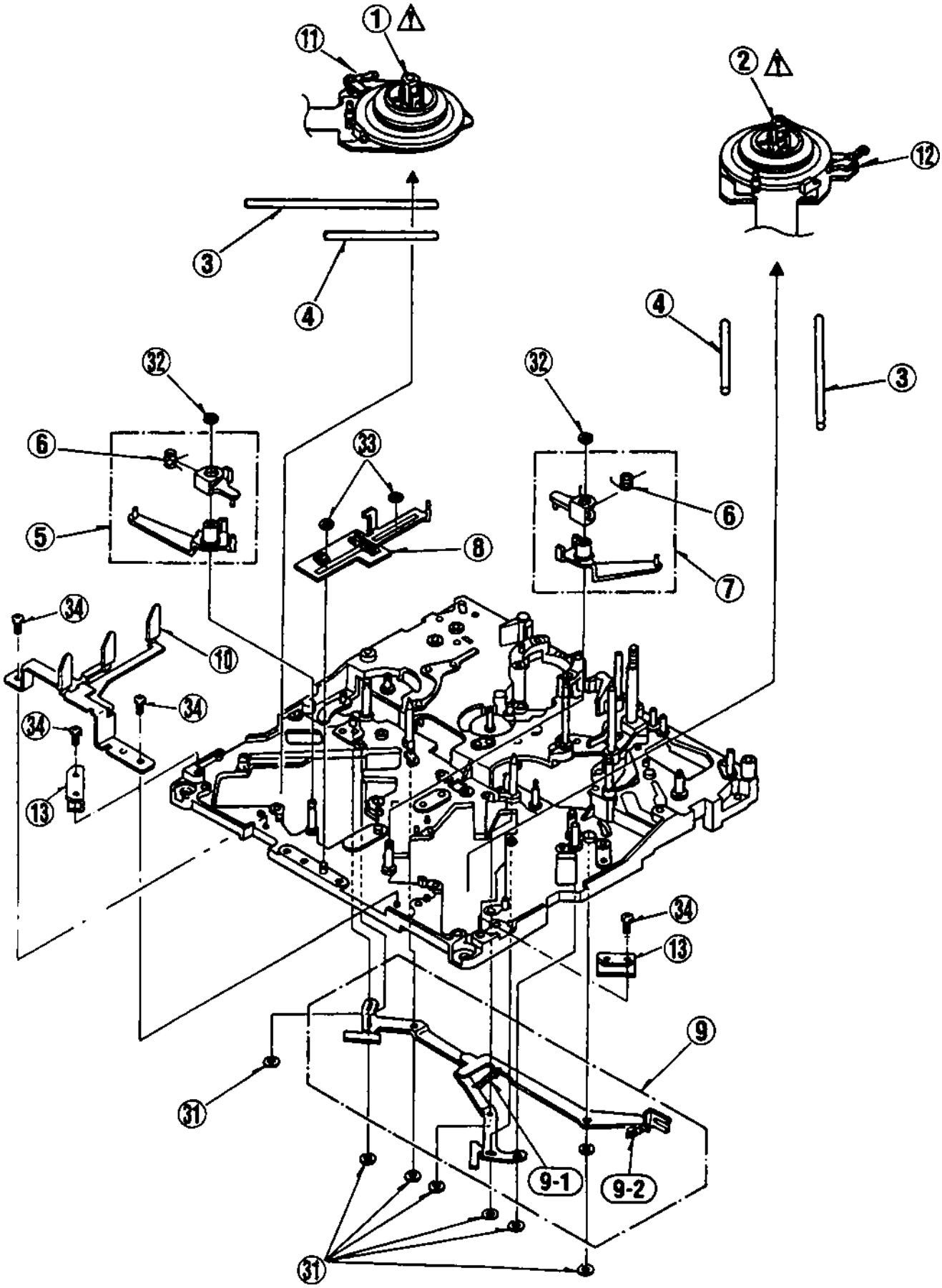
1
11
2
12
3
4
4
3
32
32
6
33
6
5
8
7
34
10
34
34
13
34
13
9
31
9-1
9-2
31

Ref.No.	Part No.	Part Name & Description	Pcs	Remarks
1	VXA5554	A/C HEAD BASE (1) ASS'Y	1	
2	VED0419	A/C HEAD	1	(M)
3	VXA6067	A/C HEAD BASE (2) ASS'Y	1	
4	VMB2935	A/C HEAD HIGHT SPRING	1	
5	VEG1498	CYLINDER UNIT	1	(M)
6	VXA5715	EMARGENCY SHIFT HOLDER	1	
▪ 7	VEM0645	LOADING MOTOR (1)A ASS'Y	1	(M)
8	VSJ0227	PINCH SOLENOID	1	(M)
9	VXA5584	MOTOR ANGLE ASS'Y	1	
10	VES0814	MODE SW ASS'Y	1	(M)
11	VMA9376	PINCH SOLENOID BASE	1	
12	VXL2748	CLEANING ARM A ASS'Y	1	(M)
12-1	VMX2150	CLEANER ROLLER HOLDER	1	
12-2	VXP1808	CLEANER ROLLER ASS'Y	1	
12-3	VMB3114	CLEANER ROLLER SPRING	1	
13	VXL2870	T2 ARM ASS'Y	1	
13-1	VMB3304	T2 ARM SPRING	1	
14	VXL2831	TENSION ARM A ASS'Y	1	(M)
14-1	VXP1761	TENSION ROLLER	1	
14-2	VMB3220	TENSION LEG SPRING	1	
14-3	VXA6173	MAGNET HOLDER ASS'Y	1	
15	VXA5791	TENSION LEG SPRING HOOK	1	
16	VXL2709	S1 LOADING ARM ASS'Y	1	(M)
17	VMD2533	LOADING RAIL	1	
18	VXA6378	T1 BOAT ASS'Y	1	(M)
19	VHD0561	HEX SCREW	1	
20	VXA6052	S POST BASE AU.	1	(M)
21	VXP1683	T4 CONNECTION GEAR ASS'Y	1	
22	VXL2772	T4 ARM ASS'Y	1	
23	VMB2950	T4 THRUST SPRING	1	
24	VXL2898	T LOADING ARM N ASS'Y	1	
25	VMS5906	T3 UPPER FRANGE	1	
26	VMS5905	T3 SLEEVE	1	
27	VMS5904	T3 LOWER FRANGE	1	
28	VMB2929	T3 SPRING	1	
29	VMB2933	PINCH RELEASE SPRING	1	
30	VEK7927	INSULLATION SENSOR	1	
31	VEK7691	LED HOLDER P.C.BOARD	1	
32	VMA9411	PINCH SOLENOID ANGLE	1	
33	VXA5820	TENSION SENSOR ASS'Y	1	
34	VXL2835	PINCH ARM ASS'Y	1	(M)
35	VXL2588	PINCH GUIDE ARM ASS'Y	1	
36	VXA5570	T SECTOR GEAR ASS'Y	1	
37	VXL2838	TENSION LEG. GUIDE ARM	1	
38	VXA5567	S SECTOR GEAR ASS'Y	1	
39	VXA5564	T4 SECTOR GEAR ASS'Y	1	
40	VXA5563	MAIN ROD ASS'Y	1	
41	VXA5627	THRUST SHAFT HOLDER ASS'Y	1	
42	VDG1166	MOTOR WARM GEAR	1	
43	VDG1268	MOTOR EMARGENCY GEAR A(A)	1	
44	VDG1267	MOTOR EMARGENCY GEAR B(A)	1	
45	VXL2889	MAIN CAM ARM ASS'Y	1	
46	VDG1168	MAIN CAM GEAR	1	(M)
47	VMB2937	A/C HEAD ADJUST SPRING	1	
48	VXL2600	EJECT ARM ASS'Y	1	
49	VMD3475	T1 GUIDE ASS'Y	1	
50	VMB2934	SPRING	1	
51	VMB3051	CLEANER RETURN SPRING	1	
52	VXA6077	CLEANER BASE 1 ASS'Y	1	
53	VXA6078	CLEANER SOLENOID ASS'Y	1	
53-1	VSJ0226	CLEANER SOLENOID	1	(M)
53-2	VMA9877	CLEANER SOLENOID BASE	1	
54	VMM0429	CLEANER INTERLOCK	1	
55	VXQ0556	THRUST SCREW ASS'Y	1	(M)
56	VMT0871	SILENCER A	1	
57	VMT0872	SILENCER B	1	
61	VHD0356	SCREW	1	
62	XQN2+A3	SCREW	1	
64	XQN2+A35FZ	SCREW	3	
65	XQN2+AM2	SCREW	3	
66	XQN2+AM4	SCREW	1	

Ref.No.	Part No.	Part Name & Description	Pcs	Remarks
67	XQN2+CF3	SCREW	12	
68	XQN2+CF4	SCREW	3	
69	XUC12FP	E-RING	2	
70	XVE2B4FZ	HEX SCREW	3	
71	XVE2B6FP	HEX SCREW	1	
72	XVE2B12FP	HEX SCREW	1	
73	VXQ0439	SCREW	3	
74	VMX0967	CUT WASHER	3	
75	VMX1061	WASHER	3	
76	VMX1079	CUT WASHER	1	
77	XWA2B	WASHER	4	
78	XWE2	WASHER	2	
79	XWE16VW	WASHER	1	
80	XXE2A6FP	HEX SCREW	1	
81	XWG2	WASHER	3	
82	XWGV15Z32G	WASHER	2	
83	VHD0045	NYLON NUT	1	
84	VHN0312	NUT	2	
85	XQN2+AQ3.5FZ	SCREW	1	
86	XQN2+AJ5	SCREW	1	
87	XQN2+A1.5	SCREW	4	
88	XQN2+A4	SCREW	1	
89	VMX1394	CUT WASHER	1	
*	VXY1431Z1	MECHANISM	1	(M)

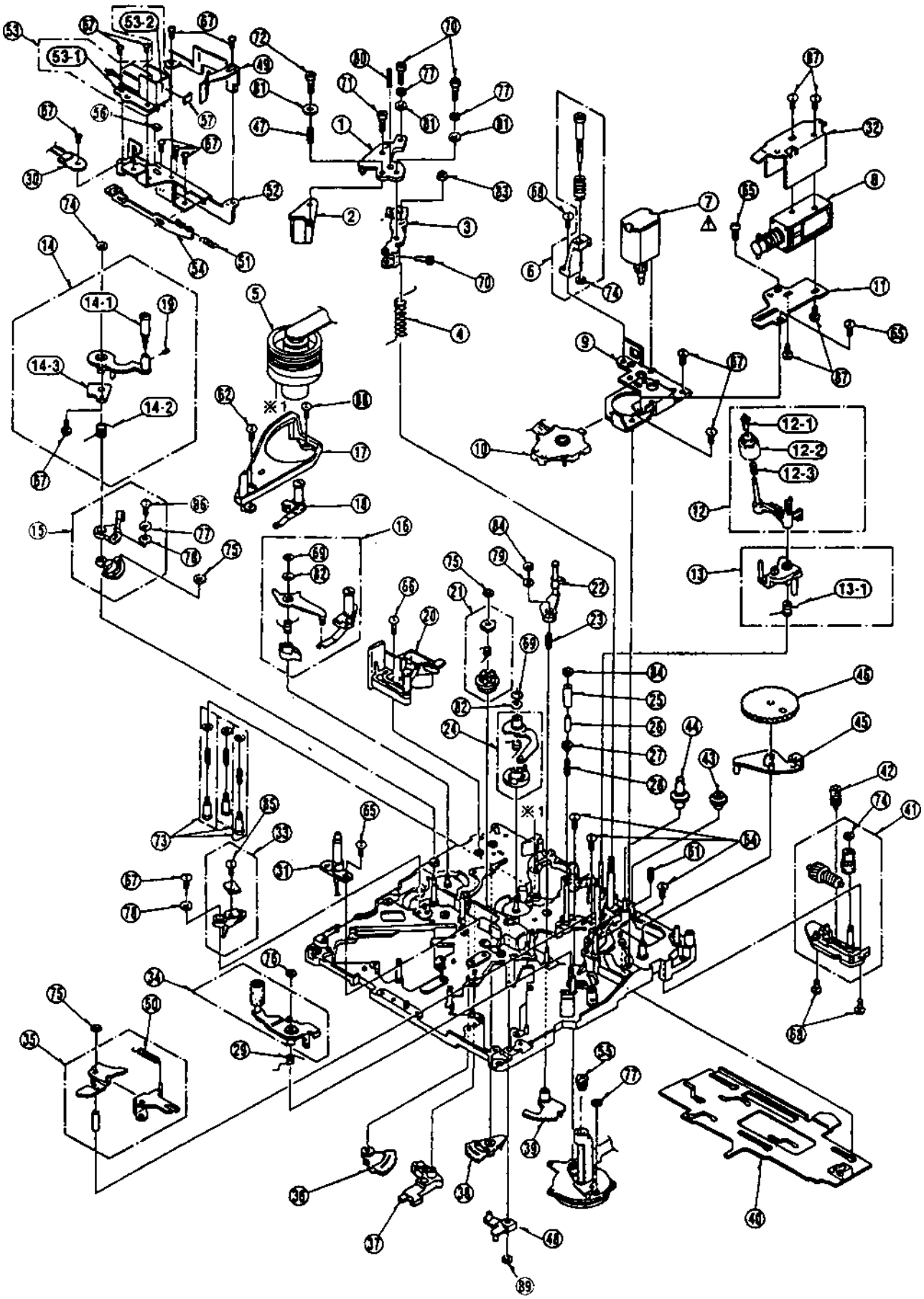
53-2
53-1
14-1
14-3
14-2
12-1
12-2
12-3
13-1
※1
※1

Ref.No.	Part No.	Part Name & Description	Pcs	Remarks
1	VXL2656	MIC DRIVE ARM (A) ASS'Y	1	
2	VMB3018	MIC DRIVE SPRING	1	
3	VXL2657	MIC DRIVE ARM (B) ASS'Y	1	
4	VDB1429	MIC DRIVE ARM BOSS	1	
5	VXL2613	REEL DRIVE ARM ASS'Y	1	
6	VDG1192	REEL DRIVE CAM GEAR	1	
7	VDG1193	REEL DRIVE WORM WHEEL	1	
8	VEM0585	REEL DRIVE MOTOR ASS'Y	1	(M)
9	VDG1211	MIC GENEVA GEAR	1	
10	VXP1698	REEL DRIVE WORM ASS'Y	1	
11	VXA5628	MOTOR BASE ASS'Y	1	
12	VMB3019	MIC DRIVE RETURN SPRING	1	
13	VEK7726	REEL SENSOR P.C.BOARD	1	
14	VSJ0216	BRAKE SOLENOID	3	(M)
15	VXA5575	S-BRAKE SOLENOID BASE	1	
17	VXA6199	DISTINCTION SW ASS'Y	1	(M)
18	VXA5579	M STOPPER SOLENOID ASS'Y	1	
19	VXA5887	T-BRAKE SOLENOID BASE ASS	1	
20	VXK1336	SUB CHASSIS	1	
21	VEK7692	SENSOR HOLDER ASS'Y	1	
22	VMS6193	T BRAKE RELEASE ARM SHAFT	1	
23	VMB2957	S BRAKE SPRING	1	
24	VMB2987	T BRAKE SPRING	1	
31	XQN2+CF3	SCREW	13	
32	XYN26+K6	SCREW	4	
33	XQN2+A1.5	SCREW	2	
34	XQN2+A2	SCREW	2	
35	VMX1079	CUT WASHER	5	
36	VMX0967	CUT WASHER	4	
37	VMX1548	CUT WASHER	2	
38	XQN2+A1.5	SCREW	4	
E27	VEP82216B	MECH I/F P.C.BOARD	1	

SUB CHASSIS ASSEMBLY

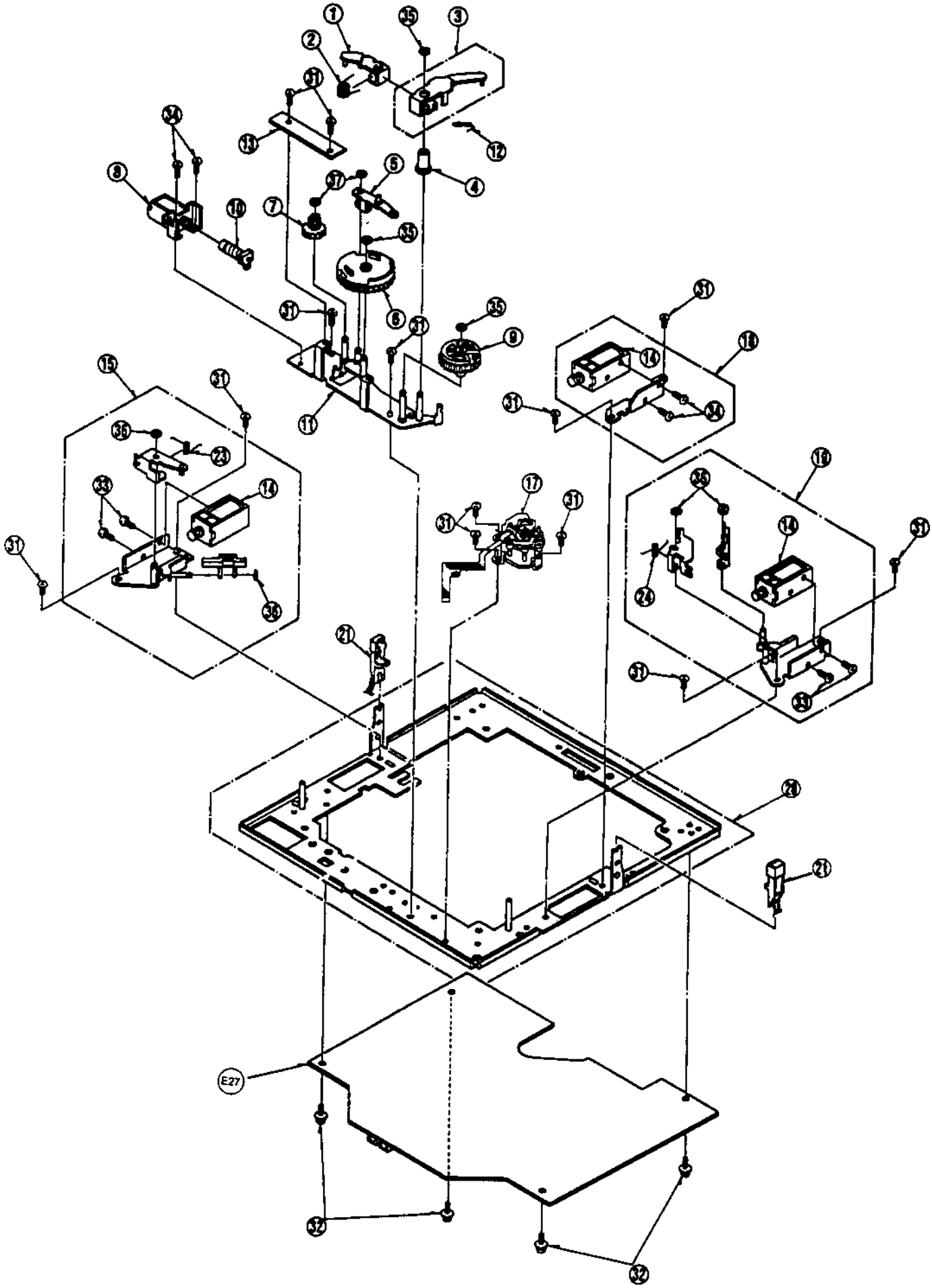

Ref.No.	Part No.	Part Name & Description	Pcs	Remarks
1	VYP6737	UPPER FRONT PANEL 1 ASS'Y	1	FOR AJ-D850P
1	VYP6737	UPPER FRONT PANEL 1 ASS'Y	1	FOR AJ-D850E
2	VMB2923	BLINDER SPRING	1	
3	VKF2785	BLINDER PANEL	1	
4	VMP4864	UPPER FRONT PANEL ANGLE	1	
5	VDK0147	CASSETTE GUIDE CAM	2	
6	VGQ4009	CASSETTE GUIDE (L)	1	
7	VMB2922	CASSETTE GUIDE SPRING	2	
8	VMB2986	CAM SPRING	2	
9	VMS5864	CASSETTE COVER	1	
10	VMS6017	GUIDE CAM SHAFT	1	
11	VGQ4010	CASSETTE GUIDE (R)	1	
12	VEE9649	UP FRONT CONNECTION CABLE 1	1	
13	VEE9650	UP FRONT CONNECTION CABLE 2	1	
14	VMZ2501	INSULATION SHEET	1	
15	VEE9640	FRONT SW CABLE	2	
16	VGU5334	LEVER VR KNOB	1	
17	VXU0768-1	VR KNOB ASS'Y	3	
18	VXU1160	REC VR KNOB ASS'Y	4	
19	VGU5780	SEARCH DIAL COVER	1	
20	VGU8126	SEARCH DIAL KNOB	1	
22	VYP6732	LOWER FRONT PANEL 1 ASS'Y	1	
23	VSP1097	SEARCH DIAL	1	
24	VMP4860	VR ANGLE	1	
25	VKU0513	BACK COVER	1	FOR AJ-D850P
25	VKU0524	BACK COVER	1	FOR AJ-D850E
26	VMB2978	LEAF SPRING	2	
27	VGM1288	SUB CONTROL SUPPORT ANGLE	1	
28	VGM1287	SUB CONTROL ANGLE	1	
29	VGM1269	SUB SW ANGLE	1	FOR AJ-D850P
29	VGM1359	SUB SW ANGLE	1	FOR AJ-D850E
30	VGU7179	SLIDE SW KNOB	10	
32	VWJ28C2120L0	FR CPU SUB FFC	1	
33	VMS6012	SHAFT	1	
34	VKF2497	SUB SW DOOR	1	
35	VMC1241	EARTH PLATE	1	
36	VMP5091	EARTH PLATE SUB	1	
37	VMP4863	CASSETTE GUIDE ANGLE	1	
38	VMC1277	HEAD PHONE EARTH SPRING	1	
39	VMZ2671	SPACER	1	
40	VGU5287	SLIDE KNOB	5	
41	VGF0659	SLIDE KNOB SHEET	5	
42	VMC1319	FRAME EARTH PLATE	1	FOR AJ-D850E
43	VMP5259	FIXING PLATE	1	FOR AJ-D850E
45	VSC4594	PANEL EARTH SHEET	1	FOR AJ-D850E
46	VMP5262	INSTALLTION PANEL A	1	FOR AJ-D850E
47	VMC1317	INSTALLTION PANEL A	1	FOR AJ-D850E
48	VMP5260	FRONT SW CABLE ANGLE	1	FOR AJ-D850E
71	XSB3+6FZ	SCREW	2	
72	XSB3+8FZ	SCREW	3	
73	XSN2+8	SCREW	1	
74	XSS26+6FZ	SCREW	2	
75	XTN4+10G	SCREW	13	
76	XTV3+8G	SCREW	16	
77	XQN14+C4	SCREW	5	
78	XTV3+8F	SCREW	2	
79	XSN2+3	SCREW	2	
80	XSN26+3	SCREW	1	
81	VMX2562	WASHER	8	
82	XUC2FP	E-RING	2	
83	XUC25FP	E-RING	2	
84	XSB3+4	SCREW	1	FOR AJ-D850E
85	XSB26+5	SCREW	1	FOR AJ-D850E
86	XTV3+6F	SCREW	2	
E20	VEP80A76A	UP FRONT 1 P.C.BOARD	1	
E21	VEP80852A	UP FRONT 2 P.C.BOARD	1	
E22	VEP86263B	UP FRONT 2 P.C.BOARD	1	
E23	VEP86148A	FRONT CPU SUB P.C.BOARD	1	

Ref.No.	Part No.	Part Name & Description	Pcs	Remarks
E24	VEP80A49B	FRONT SW P.C.BOARD	1	
E25	VEP80963C	FRONT VR 1 P.C.BOARD	1	
E26	VEP80964C	FRONT VR 2 P.C.BOARD	1	

FRONT PANEL ASSEMBLY

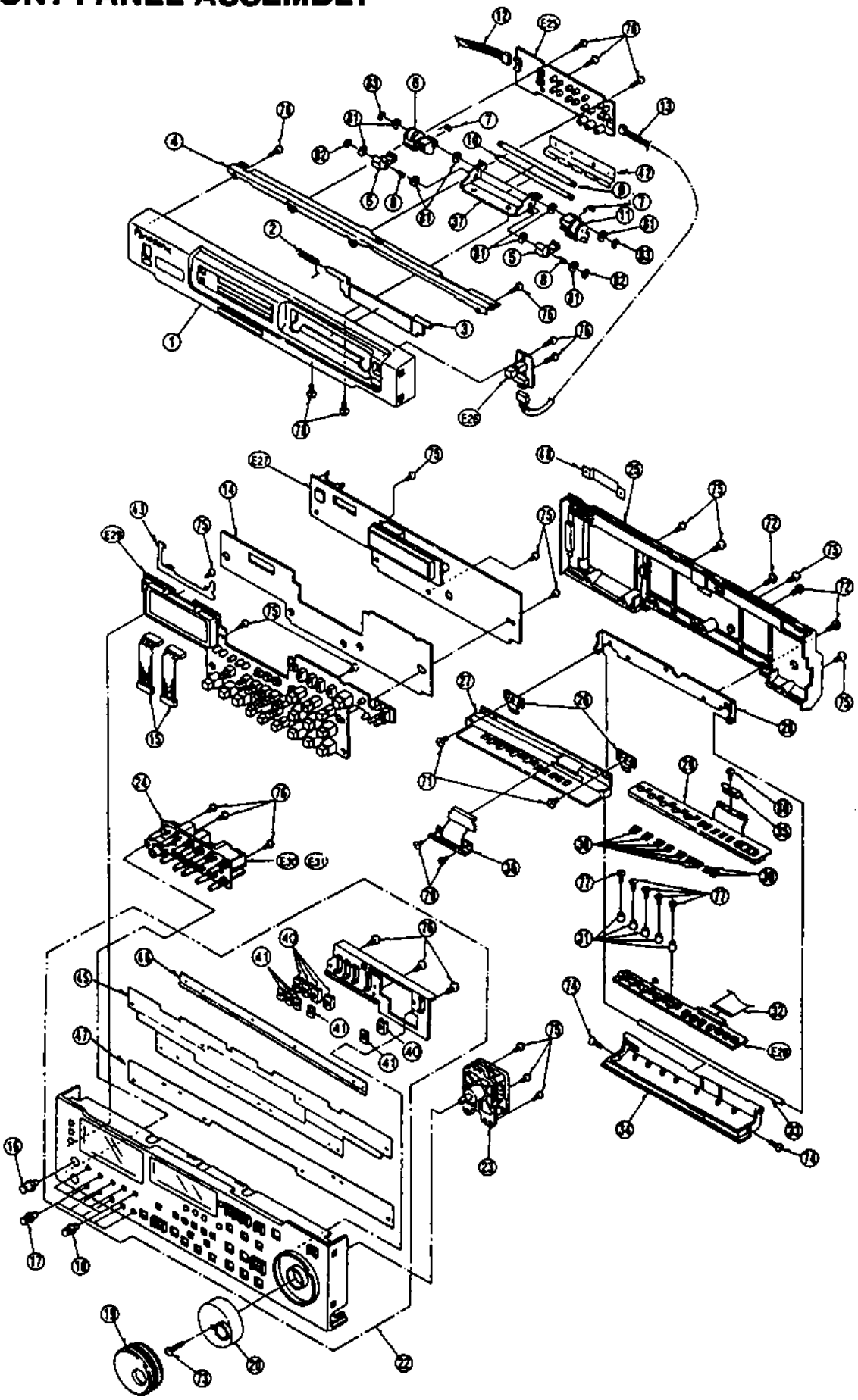

Ref.No.	Part No.	Part Name & Description	Pcs	Remarks
1	VRF0190	FAN MOTOR	1	
2	VHN0063	NYLON NUT	2	
3	VMX0835	SPACER	2	
▪ 4	VJH0939	JACK PANEL	1	FOR AJ-D850P
4	VJH1079	JACK PANEL	1	FOR AJ-D850E
5	VML2903	AC CORD HOOK	1	
7	VSC4387	POWER SUPPLY CASE A	1	
8	VRF0190	FAN MOTOR	1	
9	VMZ2502	SHIELD SHEET A	1	
10	VMZ2503	SHIELD SHEET B	1	
11	VSC4388	POWER SUPPLY CASE B	1	
▪ 12	VMZ1252	AC INLET COVER	1	
▪ 13	VJP0083	AC INLET	1	
14	VMP4889	AC INLET BRACKET	1	
15	XBA1C50NB5	FUSE	1	FOR AJ-D850P
▪ 15	XBA2C40TH15	FUSE	1	FOR AJ-D850E
▪ 16	VJF1005	FUSE HOLDER	1	
17	VJF0285	WIRE LOCKING SADDLE	4	
23	VMP5032	OPTION PANEL	1	
24	VEE9648	AES/EBU CABLE	1	
25	VMT0884	GASKET (O)	1	FOR AJ-D850E
▪ 26	VEK8447	POWER SUPPLY ASS'Y	1	FOR AJ-D850P
▪ 26	VEK8448	POWER SUPPLY ASS'Y	1	FOR AJ-D850E
71	VHD0426	SCREW	1	
72	XSN26+6FZ	SCREW	22	
73	XSN4+35FC	SCREW	2	
74	XTN26+6FFZ	SCREW	1	
75	XTV3+6F	SCREW	5	
76	XTV3+6FFZ	SCREW	2	
77	XTV3+6FFR	SCREW	7	
78	XSB3+6FZ	SCREW	2	
79	XTW3+8LR	SCREW	10	
80	XYE4+EF8	SCREW	1	
81	XYNV4+K35FCS	SCREW	2	
E14	VEP83224A	V/S JACK P.C.BOARD	1	
E15	VEP81183A	POWER 1 P.C.BOARD	1	
E16	VEP81184B	POWER 2 P.C.BOARD	1	
E18	VEP84183A	A JACK P.C.BOARD	1	
E19	VEP84187A	AES/EBU P.C.BOARD	1	

REAR PANEL ASSEMBLY

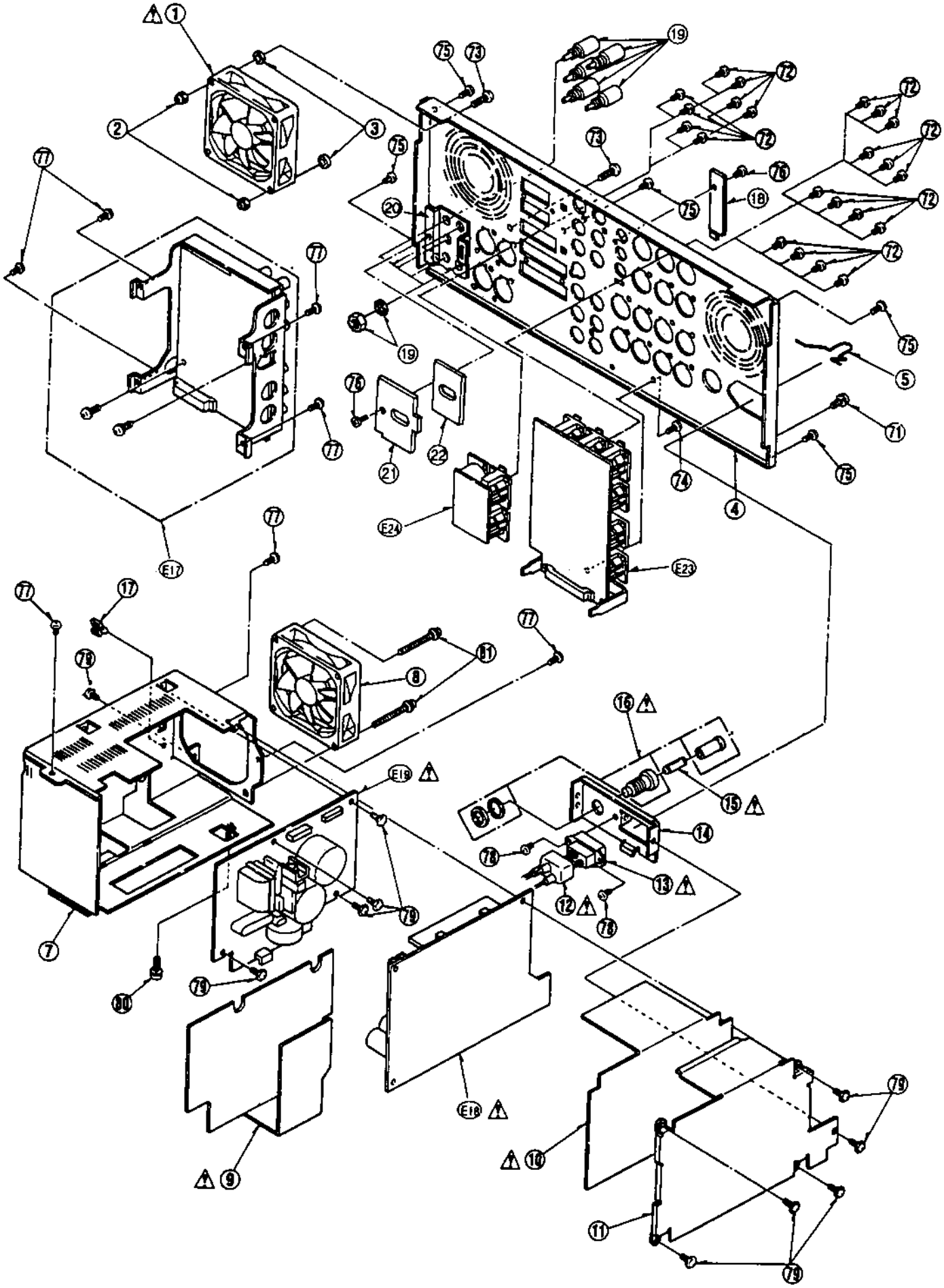

Ref.No.	Part No.	Part Name & Description	Pcs	Remarks
1	VYP6496	TOP PANEL	1	
2	VMP4884	P.C.BOARD PLATE L	1	
3	VMX2511	P.C.BOARD RUBBER CUSHION L	2	
4	VMP4885	P.C.BOARD PLATE S	1	
5	VMX2512	P.C.BOARD RUBBER CUSHION S	1	
6	VMX2510	SPACER	2	
7	VMZ2325	TOP PANEL BARRIER	1	
8	VGM1567	SIDE PANEL	2	FOR AJ-D850P
8	VGM1271	SIDE PANEL	1	FOR AJ-D850E
9	VKU0514	BOTTOM PLATE	1	
10	VMX1558	NYLON WASHER	2	
11	VEE9641	FRONT CABLE	1	
12	VMX2582	WASHER	2	
13	VMP5265	CARRIAGE SUPPORT	1	
14	VMT0797	GASKET C	1	
15	VMT0509	GASKET (B)	1	FOR AJ-D850E
16	VMT0800	GASKET (C)	1	FOR AJ-D850E
17	VMT0776	GASKET (F)	1	FOR AJ-D850E
18	VMT0797	GASKET C	3	
19	VMT0785	DUST PROOF CUSHION (B)	1	
20	VMT0786	DUST PROOF CUSHION (C)	1	
21	VMT0890	DUST PROOF CUSHION (C)	1	
75	XYN3+K8	SCREW	2	
74	XTV3+6F	SCREW	3	
73	XSB4+8FC	SCREW	8	
72	XSB3+8FZ	SCREW	8	
71	VHD0274	SCREW	2	

CASING PARTS ASSEMBLY

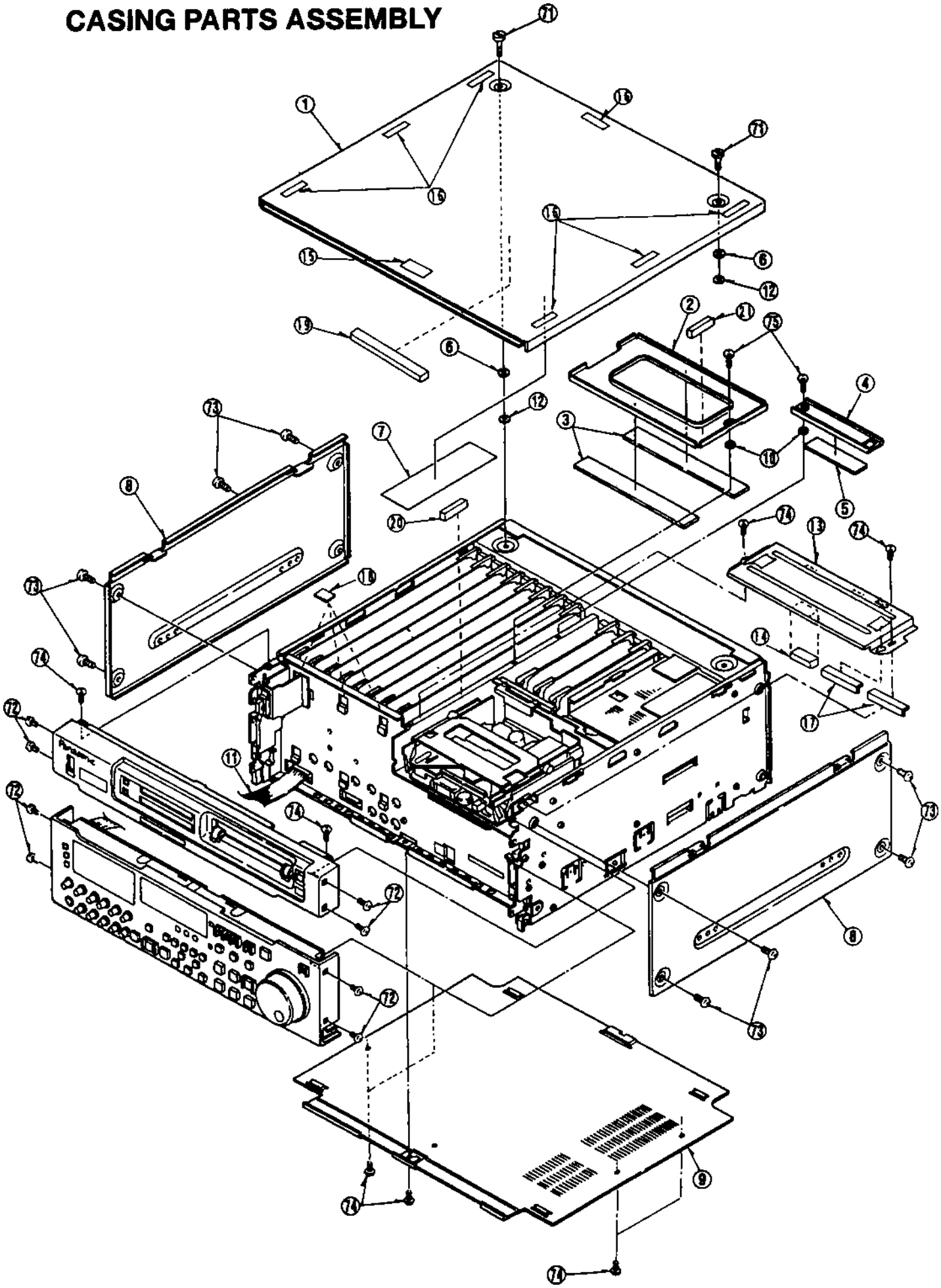

Ref.No.	Part No.	Part Name & Description	Pcs	Remarks
1	VMP4871	LEFT SIDE FRAME	1	
2	VGQ4011	P.C.BOARD GUIDE RAIL A	2	
3	VYQ1258	ROTARY BRACKET L	1	
4	VGQ4012	P.C.BOARD GUIDE RAIL B	2	
5	VMP4877	REAR FRAME	1	
6	VKA0117	PLASTIC FOOT	4	
7	VMP4878	BOTTOM FRAME	1	
8	VMP4881	SW BRACKET	1	
▪ 9	EST15372T	POWER SWITCH	1	FOR AJ-D850P
9	EST15367T	POWER SWITCH	1	FOR AJ-D850E
▪ 10	VMZ0580	SW COVER	1	
11	VJF0285	WIRE LOCKING SADDLE	4	
12	VJF1259	EDGE HOLDER	1	
13	VMP4876	FRONT FRAME	1	
14	VJF0004	WIRE SADDLE	3	
15	VMP4873	CENTER FRAME	1	
16	VXA5550	MECHANISM FRAME ASS'Y	1	
17	VGF0715	INSULATION SHEET	1	
18	VMP4874	CENTER SUB FRAME	1	
19	VGQ1543	EDGE GUARD	1	
20	VMP4875	MIDDLE FRAME	1	
21	VYQ1259	ROTARY BRACKET R	1	
22	VMP4872	SIDE FRAME R	1	
23	VJF0384	CLAMPER	2	
25	VMP5264	FPC SHIELD COVER	1	
26	VSC4384	POWER CABLE COVER	1	FOR AJ-D850E
27	VMC1318	FRAME EARTH METAL	1	FOR AJ-D850E
28	VMP5263	SHIELD COVER	1	FOR AJ-D850E
29	VMT0609	GASKET	1	FOR AJ-D850E
30	VMP5285	BOTTOM FRAME ANGLE	4	
31	VGF0714	BARRIER A	1	
32	VMT0873	GASKET (D)	10	
33	VMT0905	GASKET	2	
34	VEE0C19	POWER DC2 CABLE	1	
71	VHD5013	SCREW	2	
72	XTN3+6F	SCREW	2	
73	XTV3+6F	SCREW	27	
74	XTV3+6FFR	SCREW	9	
75	XYN3+C6	SCREW	6	
76	XYNV3+K12S	SCREW	4	
E1	VEP80A48A	MOTHER P.C.BOARD	1	
E2	VEP82220A	F1 SERVO P.C.BOARD	1	
E3	VEP86267A	F2 SYSCON P.C.BOARD	1	
E4	VEP83410C	F4 VIDEO OUT P.C.BOARD	1	
E5	VEP83394A	F5 REC PB P.C.BOARD	1	
E6	VEP83409B	F6 VIDEO IN P.C.BOARD	1	
E7	VEP84326A	F7 A PROC P.C.BOARD	1	
E8	VEP84301B	F8 A ADDA P.C.BOARD	1	
E9	VEP84302C	H2 CUE P.C.BOARD	1	
E10	VEP85048A	H3 EQ P.C.BOARD	1	
E12	VEP85151A	BUFFER AMP P.C.BOARD	1	
E13	VEP80991A	AC HEAD IF P.C.BOARD	1	

CHASSIS FRAME ASSEMBLY

Components identified with the mark ⚠ have the special characteristics for safety.
When replacing any of these components, use only the same type.

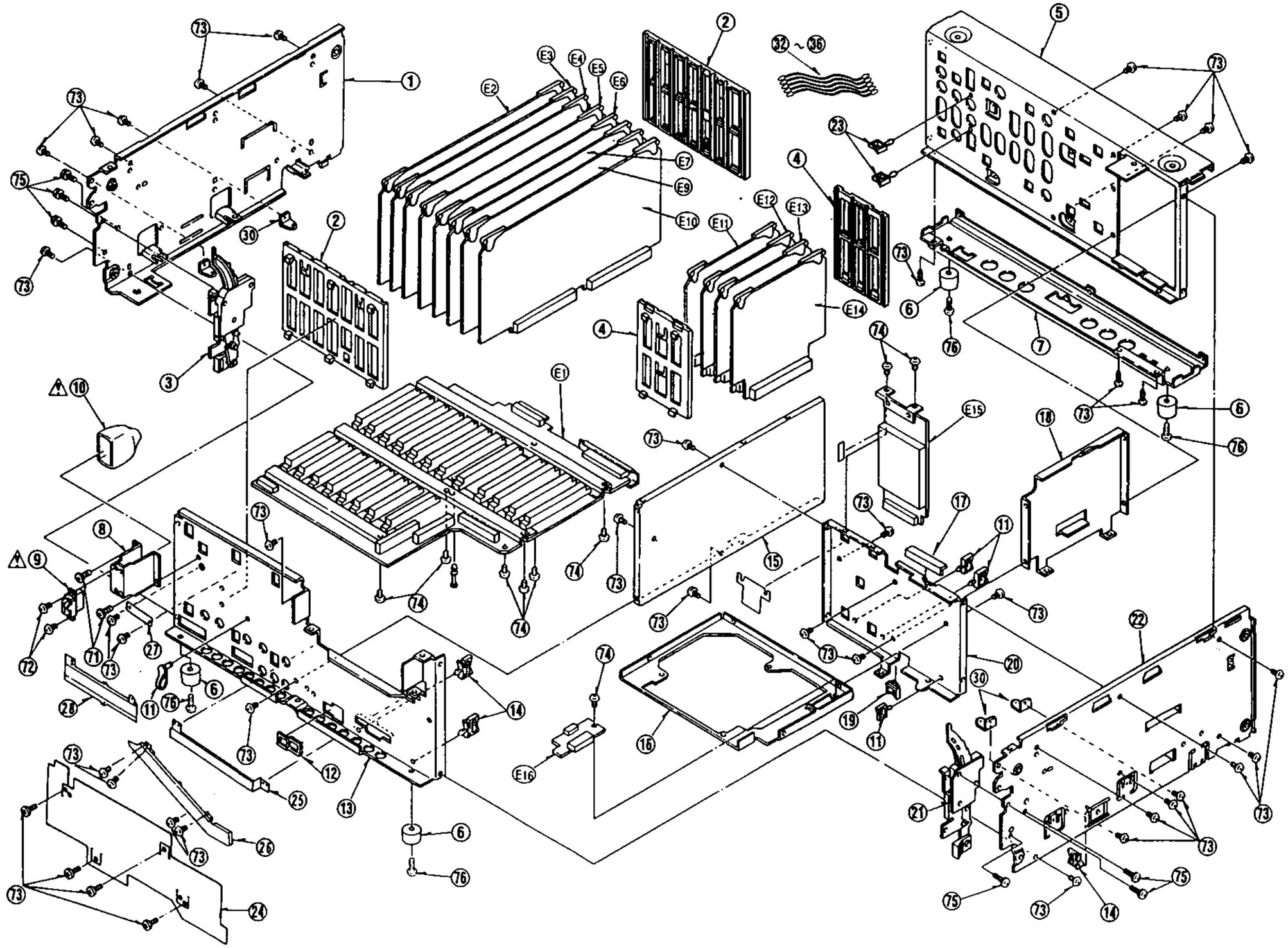

Ref.No.	Part No.	Part Name & Description	Pcs	Remarks
1	VXA6070	CASSETTE COMPARTMENT	1	(M)
2	VMS5865	MAIN SHAFT	1	
3	VMA9849	TOP PLATE	1	
4	VXA5761	FRONT GUIDE 1 ASS'Y	1	
5	VMB3075	M GUIDE SPRING	2	
6	VML3191	M GUIDE RIGHT LEVER	1	
7	VML3192	M FRONT GUIDE	2	
8	VML3190	M GUIDE LEFT LEVER	1	
9	VML3397	CASSETTE PROTECT PLATE	1	
10	VMA9760	L OPENER	1	
12	VMB2926	SPRING	1	
13	VML2A50	BLINDER PANEL OPENER	1	
23	VXL2692	OPENER ANGLE ASS'Y	1	
14	VXA6074	R SIDE PLATE 1 ASS'Y	1	
15	VML3282	SUB RAIL (R)	1	
16	VEK7695	SIDE FLEXIBLE	1	
17	VXA5766	MAIN RACK R ASS'Y	1	
18	VDG1156	WIPER RACK	2	
20	VDB1395	MAIN SHAFT ANGLE	2	
21	VDG1155	INTERLOCK GEAR	2	
22	VML3193	OPENER DRIVE ARM	1	
24	VMB2979	SPRING	1	
25	VXA6072	SIDE PLATE L 1 ASS'Y	1	
26	VML3281	SUB RAIL (L)	1	
27	VDG1254	INTERMEDIATE GEAR	1	
28	VDP1643	WIPER ROLLER	2	
29	VDG1237	CLUTCH GEAR	1	
30	VMB2980	CLUTCH SPRING	1	
31	VDG1236	WORM WHEEL	1	
32	VXA5848	MOTOR ANGLE (A) ASS'Y	1	
33	VXP1797	E.E SLOT IN WORM ASS'Y	1	
34	VXA5597	MOTOR ASS'Y	1	(M)
35	VMA9673	EMARGENCY ANGLE	1	
36	VEK7793	MOTOR P.C.BOARD	1	
37	VMA9668	HOLDER PLATE	1	
38	VEK7715	HOLDER FLEXIBLE ASS'Y	1	
39	VXA6075	MAIN RACK (L) ASS'Y	1	
40	VML2A49	WIPER ARM L	1	
41	VMB2925	WIPER SPRING L	1	
42	VDG1163	WIPER GEAR	2	
43	VMB3013	WIPER SPRING R	1	
44	VML2A52	WIPER ARM R	1	
45	VDP1642	CASSETTE GUIDE ROLLER (2)	2	
46	VDP1641	CASSETTE GUIDE ROLLER (1)	2	
47	VXA5757	CASSETTE HOLDER 1 ASS'Y	1	
48	VXA5758	ROD L	1	
49	VXA5759	ROD R	1	
50	VMB3064	SLIDE SPRING	2	
51	VML3249	SIDE GUIDE L	1	
52	VML3250	SIDE GUIDE R	1	
53	VMB3061	SLIDE GUIDE SPRING L	1	
54	VMB3062	SLIDE GUIDE SPRING R	1	
55	VMS6108	KICK OFF ROD SHAFT	2	
56	VML2A54	KICK OFF ARM L	1	
57	VML2A55	KICK OFF ARM R	1	
58	VMB2928	KICK OFF SPRING	2	
59	VML2A53	CASSETTE HOLDER ARM	2	
60	VMB2927	CASSETTE HOLDER SPRING	2	
61	VMX2833	ML DETECTION ROLLER	2	
62	VMS5882	CASSETTE HOLDER SHAFT	1	
63	VMB3253	M-L DETECTION SPRING	2	
64	VMX2559	CASSETTE PRESSURE ROLLER(2	3	
65	VMX2524	CASSETTE PRESSURE ROLLER(1	1	
66	VDG1246	EMARGENCY GEAR	1	
67	VMB3109	EMARGENCY SPRING	1	
68	VMZ2661	FRONT GUIDE COVER	1	
71	VMX0653	CUT WASHER	4	
72	VMX0967	CUT WASHER	14	
73	VMX1061	WASHER	4	
74	XQN16+A2	SCREW	8	
75	XQN2+CF3	SCREW	4	

Ref.No.	Part No.	Part Name & Description	Pcs	Remarks
76	XQN2+A2	SCREW	2	
77	XYN2+C3	SCREW	12	
78	XQN2+A3	SCREW	5	
79	LMHD16064	SCREW	10	
80	XWGV2Y4G	WASHER	2	
81	XWGV2Z5G	WASHER	2	
E28	VEP80856A	CARRIGE P.C.BOARD	1	

CASSETTE COMPARTMENT ASSEMBLY

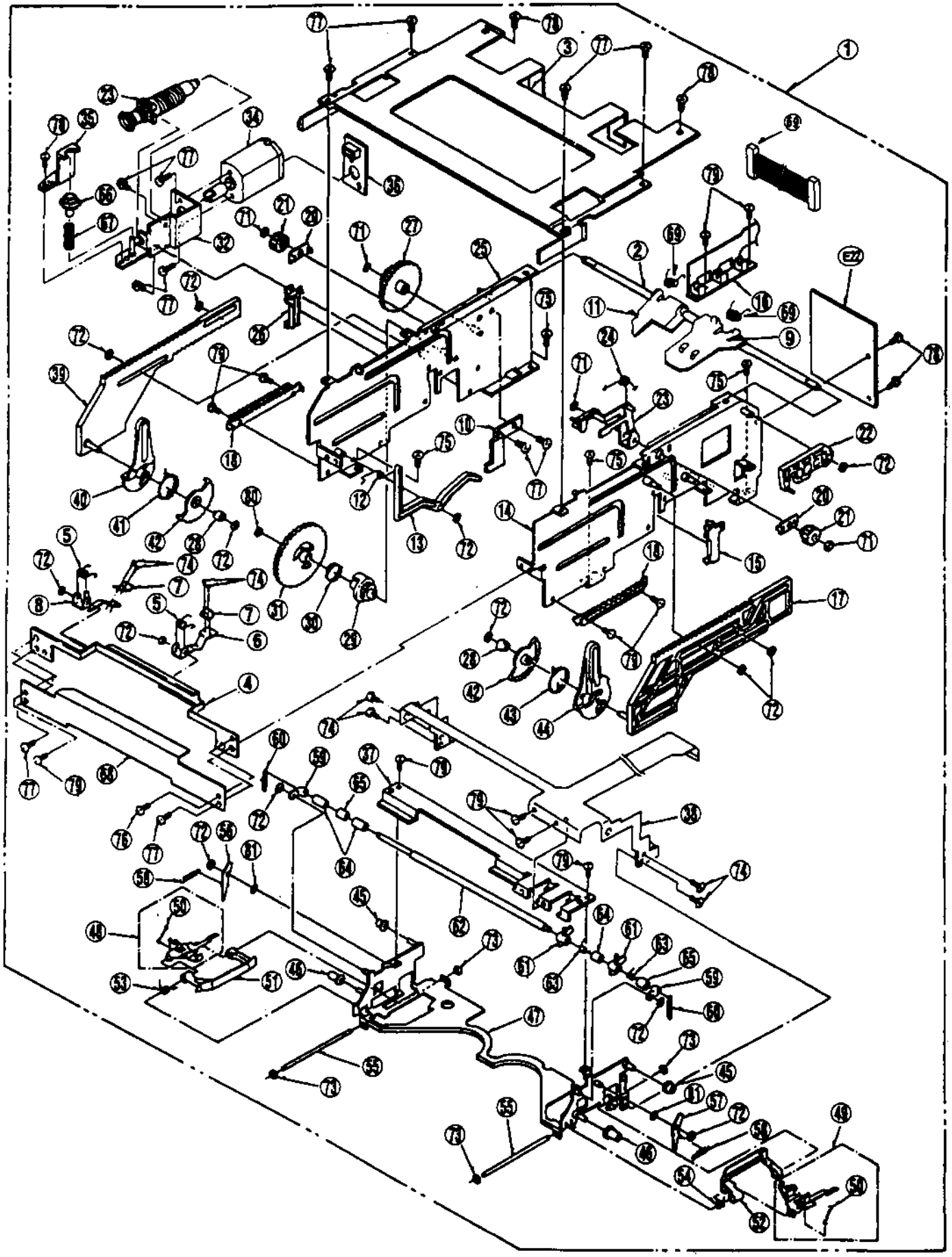

Ref.No.	Part No.	Part Name & Description	Pcs	Remarks
▪ 1	VJA0488	POWER CODE	1	FOR AJ-D850P
1	VJA0774	POWER CODE	1	FOR AJ-D850E
1	VJA0775	POWER CODE	1	FOR AJ-D850E
2	VPN4305	ACCESSORY PAD	1	
▪ 3	VQT7281	OPERATING INSTRUCTIONS	1	FOR AJ-D850P
3	VQT7282	OPERATING INSTRUCTIONS	1	FOR AJ-D850E
4	VPN4302	CUSHION UL	1	
5	VPN4304	CUSHION LL	1	
6	VPN4606	CUSHION UR	1	
7	VPN4607	CUSHION LR	1	
8	VPF0277	POLYETHYLENE BAG	1	FOR AJ-D850P
8	VPF0277	POLYETHYLENE BAG	1	FOR AJ-D850E
9	VPG9736	PACKING CASE	1	FOR AJ-D850P
9	VPG9737	PACKING CASE	1	FOR AJ-D850E
10	VPF0149	HANDLE	2	
11	VXF0159	EMARGENCY EJECT	1	

Ref.No.	Part No.	Part Name & Description	Pcs	Remarks

PACKING PARTS ASSEMBLY

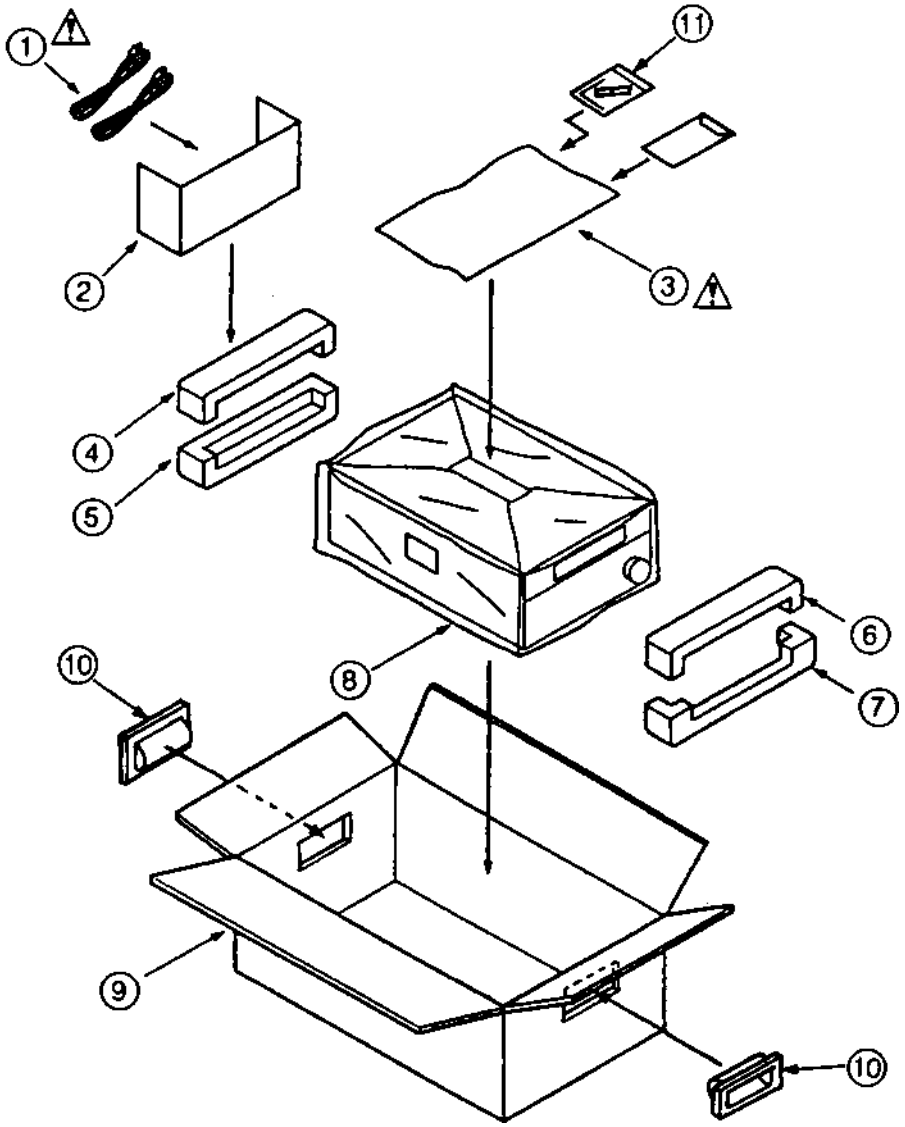

Ref.No.	Part No.	Part Name & Description	Pcs	Remarks
■E1	VEP80A48A	MOTHER P.C.BOARD	1	(RTL)
■E2	VEP82220A	F1 SERVO P.C.BOARD	1	(RTL)FOR AJ-D850P
■E2	VEP82220B	F1 SERVO P.C.BOARD	1	(RTL)FOR AJ-D850E
■E3	VEP86267A	F2 SYSCON P.C.BOARD	1	(RTL)FOR AJ-D850P
■E3	VEP86267B	F1 SYSCON P.C.BOARD	1	(RTL)FOR AJ-D850E
■E4	VEP83410C	F4 VIDEO OUT P.C.BOARD	1	(RTL)FOR AJ-D850P
■E4	VEP83410B	F4 VIDEO OUT P.C.BOARD	1	(RTL)FOR AJ-D850E
■E5	VEP83394A	F5 REC PB P.C.BOARD	1	(RTL)FOR AJ-D850P
■	VEP83405A	V BLK SUB P.C.BOARD	1	(RTL)FOR VEP83394A
■E5	VEP83394B	F5 REC PB P.C.BOARD	1	(RTL)FOR AJ-D850E
■	VEP83405B	V BLK SUB P.C.BOARD	1	(RTL)FOR VEP83394B
■E6	VEP83409B	F6 VIDEO IN P.C.BOARD	1	(RTL)FOR AJ-D850P
■E6	VEP83449A	F6 VIDEO IN P.C.BOARD	1	(RTL)FOR AJ-D850E
■E7	VEP84326A	F7 A PROCESS P.C.BOARD	1	(RTL)
■E8	VEP84301B	F8 A AD/DA P.C.BOARD	1	(RTL)
■E9	VEP84302C	H2 CUE P.C.BOARD	1	(RTL)
■E10	VEP85048A	H3 EQ P.C.BOARD	1	(RTL)
■E11	VEP85049A	H4 RF AMP P.C.BOARD	1	(RTL)
■E12	VEP85151A	HEAD BUFFER P.C.BOARD	1	(RTL)
■E13	VEP80991A	AC HEAD I/F P.C.BOARD	1	(RTL)
■E14	VEP83224A	V/S JACK P.C.BOARD	1	(RTL)
■E15	VEP81183A	POWER 1 P.C.BOARD	1	(RTL)
■E16	VEP81184B	POWER 2 P.C.BOARD	1	(RTL)
■E17	VEP80A58A	POWER INT P.C.BOARD	1	(RTL)
■E18	VEP84183A	A JACK P.C.BOARD	1	(RTL)
■E19	VEP84187A	AES/EBU P.C.BOARD	1	(RTL)
■E20	VEP80A76A	UP FRONT 1 P.C.BOARD	1	(RTL)
■E21	VEP80852A	UP FRONT 2 P.C.BOARD	1	(RTL)
■E22	VEP86263B	FRONT CPU P.C.BOARD	1	(RTL)
■E23	VEP86148A	FRONT CPU SUB P.C.BOARD	1	(RTL)
■E24	VEP80A49B	FRONT SW P.C.BOARD	1	(RTL)
■E25	VEP80963C	FRONT VR 1 P.C.BOARD	1	(RTL)
■E26	VEP80964C	FRONT VR 2 P.C.BOARD	1	(RTL)
■E27	VEP82216B	MECHA I/F P.C.BOARD	1	(RTL)
■E28	VEP80856A	CARRIGE P.C.BOARD	1	(RTL)

Ref.No.	Part No.	Part Name & Description	Pcs	Remarks
■E1	VEP80A48A	MOTHER P.C.BOARD	1	(RTL)
P001-16	VJS3814	CONNECTOR (FEMALE)	16	
P018-20	VJS3814	CONNECTOR (FEMALE)	3	
P021	VJP2891B016	CONNECTOR (MALE)	1	
P022	VJP1248T	CONNECTOR (MALE) 8P	1	
P023	VJP2891A030	CONNECTOR (MALE)	1	
P024	VJP3418A080	CONNECTOR (MALE)	1	
P025	VJP2824B003	CONNECTOR (MALE)	1	
P026	VJP2824B009	CONNECTOR (MALE)	1	
P027	VJP2824B008	CONNECTOR (MALE)	1	
P029,30	VJS3375B060	CONNECTOR (FEMALE)	2	
P031	VJP3080	CONNECTOR (MALE)	1	
P032	VJP1230T	CONNECTOR (MALE) 3P	1	
P033	VJP3375A060	CONNECTOR (MALE)	1	
		MISCELLANEOUS		
	VKC0392	SPACER	2	
	VMP4868	XLR GUIDE ANGLE (B)	1	
	VMP5641	MOTHER ANGLE (A)	1	
	VMP5642	MOTHER ANGLE (B)	1	
	VMP5643	MOTHER ANGLE (C)	1	
	XYE3+EF8FZ	SCREW	10	
	XTV26+6F	SCREW	2	
	VMX2607	PB SPACER	1	
■E2	VEP82220A	F1 SERVO P.C.BOARD	1	(RTL)FOR AJ-D850P
■E2	VEP82220B	F1 SERVO P.C.BOARD	1	(RTL)FOR AJ-D850E
C1,C2	ECUM1H103KBN	C.CAPACITOR CH 50V 0.01U	2	
C3	ECEV1CV220Q	E.CAPACITOR CH 16V 22U	1	
C4	ECEV1CV470Q	E.CAPACITOR CH 16V 47U	1	
C5,C6	ECEV1CV220Q	E.CAPACITOR CH 16V 22U	2	
C7	ECUM1H222KBN	C.CAPACITOR CH 50V 2200P	1	
C8,C9	ECUM1H103KBN	C.CAPACITOR CH 50V 0.01U	2	
C10	ECUX1H102JCN	C.CAPACITOR CH 50V 1000P	1	
C11,12	ECUM1H103KBN	C.CAPACITOR CH 50V 0.01U	2	
C13	ECUM1H101JCN	C.CAPACITOR CH 50V 100P	1	
C14	ECUM1H103KBN	C.CAPACITOR CH 50V 0.01U	1	
C15	ECUM1H222KBN	C.CAPACITOR CH 50V 2200P	1	
C30-34	ECUM1H103KBN	C.CAPACITOR CH 50V 0.01U	5	
C35	ECEV1EV330Q	E.CAPACITOR CH 25V 33U	1	
C36-38	ECUM1H103KBN	C.CAPACITOR CH 50V 0.01U	3	
C39	ECEV1CV100Q	E.CAPACITOR CH 16V 10U	1	
C40,41	ECUX1H333KBN	C.CAPACITOR CH 50V 0.033U	2	
C42,43	ECUM1H103KBN	C.CAPACITOR CH 50V 0.01U	2	
C60,61	ECUM1H103KBN	C.CAPACITOR CH 50V 0.01U	2	
C63-74	ECUM1H103KBN	C.CAPACITOR CH 50V 0.01U	12	
C80,81	ECUX1H102JCN	C.CAPACITOR CH 50V 1000P	2	
C82	ECUM1H103KBN	C.CAPACITOR CH 50V 0.01U	1	
C83	ECUM1H100DCN	C.CAPACITOR CH 50V 10P	1	
C84	ECUM1H103KBN	C.CAPACITOR CH 50V 0.01U	1	
C85,86	ECEV1EV330Q	E.CAPACITOR CH 25V 33U	2	
C87	ECUM1H103KBN	C.CAPACITOR CH 50V 0.01U	1	
C88	ECUM1H100DCN	C.CAPACITOR CH 50V 10P	1	
C89,90	ECUX1H102JCN	C.CAPACITOR CH 50V 1000P	2	
C91	ECUM1H103KBN	C.CAPACITOR CH 50V 0.01U	1	
C92,93	ECEV1EV330Q	E.CAPACITOR CH 25V 33U	2	
C94,95	ECUM1H103KBN	C.CAPACITOR CH 50V 0.01U	2	
C120,21	ECUX1H102JCN	C.CAPACITOR CH 50V 1000P	2	
C123	ECUM1H103KBN	C.CAPACITOR CH 50V 0.01U	1	
C124,25	ECUM1H100DCN	C.CAPACITOR CH 50V 10P	2	
C126	ECUM1H103KBN	C.CAPACITOR CH 50V 0.01U	1	
C127,28	ECEV1EV330Q	E.CAPACITOR CH 25V 33U	2	
C129,30	ECUM1H103KBN	C.CAPACITOR CH 50V 0.01U	2	
C131,32	ECUX1H102JCN	C.CAPACITOR CH 50V 1000P	2	
C133,34	ECEV1EV330Q	E.CAPACITOR CH 25V 33U	2	
C135	ECUM1H103KBN	C.CAPACITOR CH 50V 0.01U	1	
C160,61	ECUX1H102JCN	C.CAPACITOR CH 50V 1000P	2	
C162	ECUM1H103KBN	C.CAPACITOR CH 50V 0.01U	1	

Ref.No.	Part No.	Part Name & Description	Pcs	Remarks
C163,64	ECUM1H100DCN	C.CAPACITOR CH 50V 10P	2	
C165	ECUM1H103KBN	C.CAPACITOR CH 50V 0.01U	1	
C166,67	ECEV1EV330Q	E.CAPACITOR CH 25V 33U	2	
C168,69	ECUM1H103KBN	C.CAPACITOR CH 50V 0.01U	2	
C170,71	ECUX1H102JCN	C.CAPACITOR CH 50V 1000P	2	
C172	ECUM1H103KBN	C.CAPACITOR CH 50V 0.01U	1	
C173,74	ECEV1EV330Q	E.CAPACITOR CH 25V 33U	2	
C175	ECUM1H103KBN	C.CAPACITOR CH 50V 0.01U	1	
C200	ECUM1H472KBN	C.CAPACITOR CH 50V 4700P	1	
C202,03	ECUM1H103KBN	C.CAPACITOR CH 50V 0.01U	2	
C204	ECEV1CV470Q	E.CAPACITOR CH 16V 47U	1	
C205-07	ECUM1H103KBN	C.CAPACITOR CH 50V 0.01U	3	
C208-10	ECUM1H472KBN	C.CAPACITOR CH 50V 4700P	3	
C211	ECEV1CV470Q	E.CAPACITOR CH 16V 47U	1	
C212,13	ECUM1H103KBN	C.CAPACITOR CH 50V 0.01U	2	
C214	ECEV1CV470Q	E.CAPACITOR CH 16V 47U	1	
C215,16	ECUX1E104KBN	C.CAPACITOR CH 25V 0.1U	2	
C218	ECUM1H103KBN	C.CAPACITOR CH 50V 0.01U	1	
C230-32	ECUX1H102JCN	C.CAPACITOR CH 50V 1000P	3	
C233-36	ECUM1H103KBN	C.CAPACITOR CH 50V 0.01U	4	
C237	ECEV1CV470Q	E.CAPACITOR CH 16V 47U	1	
C238	ECUM1H103KBN	C.CAPACITOR CH 50V 0.01U	1	
C239	ECEV1CV470Q	E.CAPACITOR CH 16V 47U	1	
C240-44	ECUM1H103KBN	C.CAPACITOR CH 50V 0.01U	5	
C246-49	ECUM1H103KBN	C.CAPACITOR CH 50V 0.01U	4	
C250,51	ECUM1H150JCN	C.CAPACITOR CH 50V 15P	2	
C260,61	ECUM1H103KBN	C.CAPACITOR CH 50V 0.01U	2	
C263-70	ECUM1H103KBN	C.CAPACITOR CH 50V 0.01U	8	
C280-84	ECUM1H103KBN	C.CAPACITOR CH 50V 0.01U	5	
C286	ECUM1H103KBN	C.CAPACITOR CH 50V 0.01U	1	
C300-02	ECUM1H103KBN	C.CAPACITOR CH 50V 0.01U	3	
C303	ECEV1CV470Q	E.CAPACITOR CH 16V 47U	1	
C304-08	ECUM1H103KBN	C.CAPACITOR CH 50V 0.01U	5	
C309	ECEV1CV470Q	E.CAPACITOR CH 16V 47U	1	
C310	ECUM1H103KBN	C.CAPACITOR CH 50V 0.01U	1	
C320,21	ECUM1H103KBN	C.CAPACITOR CH 50V 0.01U	2	
C322	ECUM1H104ZFN	C.CAPACITOR CH 50V 0.1U	1	
C323	ECEV1CV100Q	E.CAPACITOR CH 16V 10U	1	
C324	ECUX1H682KBN	C.CAPACITOR CH 50V 6800P	1	
C325,26	ECEV1CV100Q	E.CAPACITOR CH 16V 10U	2	
C327,28	ECUM1H104ZFN	C.CAPACITOR CH 50V 0.1U	2	
C329	ECEV1CV100Q	E.CAPACITOR CH 16V 10U	1	
C330	ECUX1H102JCN	C.CAPACITOR CH 50V 1000P	1	
C331-34	ECUM1H103KBN	C.CAPACITOR CH 50V 0.01U	4	
C335,36	ECUM1H080DCN	C.CAPACITOR CH 50V 8P	2	
C337	ECUM1H103KBN	C.CAPACITOR CH 50V 0.01U	1	
C340	ECUM1H104ZFN	C.CAPACITOR CH 50V 0.1U	1	
C341	ECA1EXLV101	E.CAPACITOR 25V 100U	1	
C342,43	ECUM1H103KBN	C.CAPACITOR CH 50V 0.01U	2	
C344	ECUX1H682KBN	C.CAPACITOR CH 50V 6800P	1	
C345	ECA1EXLV101	E.CAPACITOR 25V 100U	1	
C346-48	ECUM1H104ZFN	C.CAPACITOR CH 50V 0.1U	3	
C349-53	ECUM1H103KBN	C.CAPACITOR CH 50V 0.01U	5	
C354	ECUX1H102JCN	C.CAPACITOR CH 50V 1000P	1	
C355	ECUM1H103KBN	C.CAPACITOR CH 50V 0.01U	1	
C356	ECUM1H104ZFN	C.CAPACITOR CH 50V 0.1U	1	
C357	ECUX1H682KBN	C.CAPACITOR CH 50V 6800P	1	
C358	ECA1EXLV101	E.CAPACITOR 25V 100U	1	
C359	ECUM1H104ZFN	C.CAPACITOR CH 50V 0.1U	1	
C360	ECA1EXLV101	E.CAPACITOR 25V 100U	1	
C361	ECUM1H104ZFN	C.CAPACITOR CH 50V 0.1U	1	
C362	ECA1EXLV101	E.CAPACITOR 25V 100U	1	
C380,81	ECUM1H103KBN	C.CAPACITOR CH 50V 0.01U	2	
C382	ECEV1CV470Q	E.CAPACITOR CH 16V 47U	1	
C383	ECUX1H682KBN	C.CAPACITOR CH 50V 6800P	1	
C384	ECEV1CV470Q	E.CAPACITOR CH 16V 47U	1	
C385,86	ECUM1H103KBN	C.CAPACITOR CH 50V 0.01U	2	
C387	ECEV1CV470Q	E.CAPACITOR CH 16V 47U	1	
C388	ECUX1H682KBN	C.CAPACITOR CH 50V 6800P	1	
C389	ECEV1CV470Q	E.CAPACITOR CH 16V 47U	1	
C390	ECUM1H103KBN	C.CAPACITOR CH 50V 0.01U	1	
C391	ECEV1CV470Q	E.CAPACITOR CH 16V 47U	1	
C400	ECEV1CV470Q	E.CAPACITOR CH 16V 47U	1	
C401-03	ECUM1H103KBN	C.CAPACITOR CH 50V 0.01U	3	
C404-06	ECUX1E104KBN	C.CAPACITOR CH 25V 0.1U	3	

Ref.No.	Part No.	Part Name & Description	Pcs	Remarks
C407	ECEV1CV100Q	E.CAPACITOR CH 16V 10U	1	
C408	ECUM1H103KBN	C.CAPACITOR CH 50V 0.01U	1	
C409-11	ECUM1H104ZFN	C.CAPACITOR CH 50V 0.1U	3	
C412	ECUM1E224ZFN	C.CAPACITOR CH 25V 0.22U	1	
C413	ECUM1H103KBN	C.CAPACITOR CH 50V 0.01U	1	
C414	ECUX1C105KBM	C.CAPACITOR CH 16V 1U	1	
C415	ECUM1H152KBN	C.CAPACITOR CH 50V 1500P	1	
C416-18	ECUM1H103KBN	C.CAPACITOR CH 50V 0.01U	3	
C419	ECEV1HV4R7Q	E.CAPACITOR CH 50V 4.7U	1	
C420	ECEV1CV100Q	E.CAPACITOR CH 16V 10U	1	
C421	ECUM1H103KBN	C.CAPACITOR CH 50V 0.01U	1	
C422	ECUM1H331JCN	C.CAPACITOR CH 50V 330P	1	
C423	ECEV1CV470Q	E.CAPACITOR CH 16V 47U	1	
C424-27	ECUM1H103KBN	C.CAPACITOR CH 50V 0.01U	4	
C428,29	ECUX1E104KBN	C.CAPACITOR CH 25V 0.1U	2	
C430	ECUM1H103KBN	C.CAPACITOR CH 50V 0.01U	1	
C431	ECEV1CV100Q	E.CAPACITOR CH 16V 10U	1	
C432-34	ECUM1H104ZFN	C.CAPACITOR CH 50V 0.1U	3	
C450	ECUX1H223KBN	C.CAPACITOR CH 50V 0.22U	1	
C451,52	ECUM1H103KBN	C.CAPACITOR CH 50V 0.01U	2	
C453,54	ECUX1E473KBN	C.CAPACITOR CH 25V 0.047U	2	
C455	ECUM1H104ZFN	C.CAPACITOR CH 50V 0.1U	1	
C456	ECEV1HV2R2Q	E.CAPACITOR CH 50V 2.2U	1	
C457	ECUM1H104ZFN	C.CAPACITOR CH 50V 0.1U	1	
C458,59	ECEV1HV2R2Q	E.CAPACITOR CH 50V 2.2U	2	
C460	ECUM1H104ZFN	C.CAPACITOR CH 50V 0.1U	1	
C461	ECUX1E473KBN	C.CAPACITOR CH 25V 0.047U	1	
C462	ECUM1H472KBN	C.CAPACITOR CH 50V 4700P	1	
C463	ECUX1H333KBN	C.CAPACITOR CH 50V 0.033U	1	
C464	ECUM1H472KBN	C.CAPACITOR CH 50V 4700P	1	
C465	ECUX1H333KBN	C.CAPACITOR CH 50V 0.033U	1	
C466	ECUM1H472KBN	C.CAPACITOR CH 50V 4700P	1	
C467	ECUX1H333KBN	C.CAPACITOR CH 50V 0.033U	1	
C468,69	ECUX1E104KBN	C.CAPACITOR CH 25V 0.1U	2	
C470	ECUM1H103KBN	C.CAPACITOR CH 50V 0.01U	1	
C471	ECEV1CV100Q	E.CAPACITOR CH 16V 10U	1	
C472	ECUX1C474KBM	C.CAPACITOR CH 16V 0.47U	1	
C473	ECUX1H223KBN	C.CAPACITOR CH 50V 0.22U	1	
C474,75	ECUX1E473KBN	C.CAPACITOR CH 25V 0.047U	2	
C476	ECUM1H104ZFN	C.CAPACITOR CH 50V 0.1U	1	
C477,78	ECEV1HV2R2Q	E.CAPACITOR CH 50V 2.2U	2	
C479	ECUM1H104ZFN	C.CAPACITOR CH 50V 0.1U	1	
C480	ECEV1HV2R2Q	E.CAPACITOR CH 50V 2.2U	1	
C481	ECUM1H104ZFN	C.CAPACITOR CH 50V 0.1U	1	
C482	ECUX1E473KBN	C.CAPACITOR CH 25V 0.047U	1	
C483	ECUM1H472KBN	C.CAPACITOR CH 50V 4700P	1	
C484	ECUX1H333KBN	C.CAPACITOR CH 50V 0.033U	1	
C485	ECUM1H472KBN	C.CAPACITOR CH 50V 4700P	1	
C486	ECUX1H333KBN	C.CAPACITOR CH 50V 0.033U	1	
C487	ECUM1H472KBN	C.CAPACITOR CH 50V 4700P	1	
C488	ECUX1H333KBN	C.CAPACITOR CH 50V 0.033U	1	
C489,90	ECUX1E104KBN	C.CAPACITOR CH 25V 0.1U	2	
C491	ECUM1H103KBN	C.CAPACITOR CH 50V 0.01U	1	
C492	ECEV1CV100Q	E.CAPACITOR CH 16V 10U	1	
C493	ECUX1C474KBM	C.CAPACITOR CH 16V 0.47U	1	
C510	ECUM1H103KBN	C.CAPACITOR CH 50V 0.01U	1	
C511	ECEV1CV470Q	E.CAPACITOR CH 16V 47U	1	
C512,13	ECUM1H103KBN	C.CAPACITOR CH 50V 0.01U	2	
C514	ECEV1CV470Q	E.CAPACITOR CH 16V 47U	1	
C515	ECUM1H103KBN	C.CAPACITOR CH 50V 0.01U	1	
C516	ECEV1EV330Q	E.CAPACITOR CH 25V 33U	1	
C517-19	ECUM1H103KBN	C.CAPACITOR CH 50V 0.01U	3	
C520	ECEV1EV330Q	E.CAPACITOR CH 25V 33U	1	
C521	ECUM1H103KBN	C.CAPACITOR CH 50V 0.01U	1	
C522,23	ECEV1HV010Q	E.CAPACITOR CH 50V 1U	2	
C524	ECEV1EV330Q	E.CAPACITOR CH 25V 33U	1	
C525	ECUM1H103KBN	C.CAPACITOR CH 50V 0.01U	1	
C526	ECEV1EV330Q	E.CAPACITOR CH 25V 33U	1	
C527,28	ECUM1H103KBN	C.CAPACITOR CH 50V 0.01U	2	
C529	ECEV1EV330Q	E.CAPACITOR CH 25V 33U	1	
C530-32	ECUM1H103KBN	C.CAPACITOR CH 50V 0.01U	3	
C533	ECEV1AV330Q	E.CAPACITOR CH 10V 33U	1	
C534	ECUM1H103KBN	C.CAPACITOR CH 50V 0.01U	1	
C535	ECEV1EV330Q	E.CAPACITOR CH 25V 33U	1	
C536	ECUM1H103KBN	C.CAPACITOR CH 50V 0.01U	1	

Ref.No.	Part No.	Part Name & Description	Pcs	Remarks
C537	ECEV1HV010Q	E.CAPACITOR CH 50V 1U	1	
C538	ECEV1EV330Q	E.CAPACITOR CH 25V 33U	1	
C539	ECUM1H103KBN	C.CAPACITOR CH 50V 0.01U	1	
C600,01	ECUM1H103KBN	C.CAPACITOR CH 50V 0.01U	2	
C602	ECUM1H330JCN	C.CAPACITOR CH 50V 33P	1	
C751	ECUX1E104KBN	C.CAPACITOR CH 25V 0.1U	1	
D1,D2	MA157	DIODE	2	
D3,D4	MA8075-H	DIODE	2	
D30,31	MA8030	DIODE	2	
D32	MA8047-H	DIODE	1	
D33-36	MA152K	DIODE	4	
D80-83	MA157	DIODE	4	
D120-23	MA157	DIODE	4	
D160-63	MA157	DIODE	4	
D200,01	MA152K	DIODE	2	
D202	MA8047-H	DIODE	1	
D203	MA152K	DIODE	1	
D204,05	MA8047-H	DIODE	2	
D206-09	MA152K	DIODE	4	
D300-02	LN1251CAL	DIODE	3	
D320,21	MA157	DIODE	2	
D340	MA728	DIODE	1	
D341	MA736	DIODE	1	
D342	MA728	DIODE	1	
D343	MA736	DIODE	1	
D344	MA8039-L	DIODE	1	
D380	MA728	DIODE	1	
D381	MA736	DIODE	1	
D382	MA728	DIODE	1	
D383	MA736	DIODE	1	
D400-05	MA738	DIODE	6	
D406,07	MA8047-H	DIODE	2	
D408-13	MA738	DIODE	6	
D450	MA152K	DIODE	1	
D451-56	MA738	DIODE	6	
D457	MA152K	DIODE	1	
D458-63	MA738	DIODE	6	
D510-13	MA701A	DIODE	4	
D514-19	MA704A	DIODE	6	
FL320,21	VLF1016A470	FILTER	2	
FL510-15	VLF0576	FILTER	6	
IC1	TC7WU04F	IC	1	
IC2	UPC4082G2	IC	1	
IC3	TC4052BF	IC	1	
IC30	UPC4082G2	IC	1	
IC31	NJM4580ED	IC	1	
IC32	AD633JR	IC	1	
IC33	UPC4082G2	IC	1	
IC34	MC74HC74AF	IC	1	
IC35	TC7W00F	IC	1	
IC60,61	MC74HC08AF	IC	2	
IC63-66	MC74HC74AF	IC	4	
IC67	MC74HC157AF	IC	1	
IC68	T74HC191AF	IC	1	
IC69	MC74HC32AF	IC	1	
IC70	MC74HC86AF	IC	1	
IC71	MC74HC04AF	IC	1	
IC72	MC74HC74AF	IC	1	
IC73	MC74HC11F	IC	1	
IC74	MC74HC27F	IC	1	
IC80,81	UPC4741G2	IC	2	
IC82	NJM2901M	IC	1	
IC83	MC74HC4050F	IC	1	
IC120,21	UPC4741G2	IC	2	
IC160	NJM2901M	IC	1	
IC161,62	UPC4741G2	IC	2	
IC200	ADG408BR	IC	1	
IC201	AD7896AR	IC	1	
IC202	AD7943BR	IC	1	
IC203	SMP08FS	IC	1	
IC204	MC74HC244AF	IC	1	
IC205	UPC4082G2	IC	1	

Ref.No.	Part No.	Part Name & Description	Pcs	Remarks
IC207	UPC4082G2	IC	1	
IC230	MC68332CFC25	IC	1	
IC231	TL7705CPSB	IC	1	
IC235	VSI2965	IC	1	FOR VEP82220A
IC235	VSI2964	IC	1	FOR VEP82220B
IC236,37	74AC74SJ	IC	2	
IC238	TC7WU04F	IC	1	
IC240	74AC08SJ	IC	1	
IC241	MC74HC244AF	IC	1	
IC260,61	Y7C18525SC	IC	2	
IC262	IDT71321A55	IC	1	
IC263,64	SN74S1051NS	IC	2	
IC265	MC74HC175F	IC	1	
IC266	MC74HC164AF	IC	1	
IC267	MC74HC273AF	IC	1	
IC268	MC74HC74AF	IC	1	
IC269	MC74HC86AF	IC	1	
IC280	MC74HCT244AF	IC	1	
IC282	SLA909SF1G	IC	1	
IC300	TE7751	IC	1	
IC301,02	MC74HC244AF	IC	2	
IC303	T74VHCT244F	IC	1	
IC304,05	MC74HC244AF	IC	2	
IC320	SC371025AVFU	IC	1	
IC321	MC14053BF	IC	1	
IC322	MC74HC574AF	IC	1	
IC323	TC7WU04F	IC	1	
IC324	T74VHCU04F	IC	1	
IC325	74AC74SJ	IC	1	
IC326	MC74HC74AF	IC	1	
IC340	TL1451CNS	IC	1	
IC341	UPC393G2	IC	1	
IC342	NJM4580ED	IC	1	
IC400,01	AN3890FBS	IC	2	
IC402	NJM4580ED	IC	1	
IC403	NJM2903M	IC	1	
IC404	NJM4580ED	IC	1	
IC450,51	AN3834K	IC	2	
IC452	UPC4558G2	IC	1	
IC510,11	NJM78L09UA	IC	2	
IC512,13	NJM79L09UA	IC	2	
IC514	XC62AP5002P	IC	1	
IC515,16	XC62AP3002P	IC	2	
IC517	NJM79L05UA	IC	1	
IC600	NJM2903M	IC	1	
IC717	TCVHC32F	IC	1	
IS235	VJS2336A040	CONNECTOR (FEMALE) 5P	1	
L230,31	VLQ0576	COIL	2	
L340	VLQ0504331K	COIL	1	
L341	VLQ0407120M	COIL 12UH	1	
L342	VLQ0504331K	COIL	1	
L380	VLQ0407120M	COIL 12UH	1	
L381,82	VLQ0504331K	COIL	2	
L510	VLP0133	COIL	1	
P1,P2	VJP3454B096	CONNECTOR (MALE)	2	
Q1	2SD601A-R	TRANSISTOR	1	
Q2,Q3	2SB709A-R	TRANSISTOR	2	
Q4	2SD601A-R	TRANSISTOR	1	
Q5	2SB709A-R	TRANSISTOR	1	
Q6	2SD601A-R	TRANSISTOR	1	
Q340,41	2SB1174-Q	TRANSISTOR	2	
Q380,81	2SB1174-Q	TRANSISTOR	2	
Q400	PU3210	TRANSISTOR	1	
Q401	PU3110	TRANSISTOR	1	
Q402	PU3210	TRANSISTOR	1	
Q403	PU3110	TRANSISTOR	1	
Q510,11	2SD601A-R	TRANSISTOR	2	
QR1	UN2213	TRANSISTOR-RESISTOR	1	
QR2	UN2113	TRANSISTOR-RESISTOR	1	
QR3	UN2215	TRANSISTOR-RESISTOR	1	

Ref.No.	Part No.	Part Name & Description	Pcs	Remarks
QR4	UN2115	TRANSISTOR-RESISTOR	1	
QR5,R6	UN2213	TRANSISTOR-RESISTOR	2	
QR7,R8	UN2113	TRANSISTOR-RESISTOR	2	
QR30	UN2213	TRANSISTOR-RESISTOR	1	
QR81,82	UN2213	TRANSISTOR-RESISTOR	2	
QR83	UN2113	TRANSISTOR-RESISTOR	1	
QR84	UN2213	TRANSISTOR-RESISTOR	1	
QR85	UN2113	TRANSISTOR-RESISTOR	1	
QR120	UN2213	TRANSISTOR-RESISTOR	1	
QR121	UN2113	TRANSISTOR-RESISTOR	1	
QR122	UN2213	TRANSISTOR-RESISTOR	1	
QR123	UN2113	TRANSISTOR-RESISTOR	1	
QR124	UN2213	TRANSISTOR-RESISTOR	1	
QR160	UN2213	TRANSISTOR-RESISTOR	1	
QR161	UN2113	TRANSISTOR-RESISTOR	1	
QR162	UN2213	TRANSISTOR-RESISTOR	1	
QR163	UN2113	TRANSISTOR-RESISTOR	1	
QR164	UN2213	TRANSISTOR-RESISTOR	1	
QR340,41	UN2111	TRANSISTOR-RESISTOR	2	
QR400	UN2213	TRANSISTOR-RESISTOR	1	
QR401	UN2113	TRANSISTOR-RESISTOR	1	
QR600	UN2217	TRANSISTOR-RESISTOR	1	
QR601	UN2211	TRANSISTOR-RESISTOR	1	
R1-R3	ERJ6GEYG102	M.RESISTOR CH 1/10W 1K	3	
R4	ERJ6RBD471	M.RESISTOR CH 1/10W 470	1	
R5	ERJ6GEYG102	M.RESISTOR CH 1/10W 1K	1	
R6	ERJ6RBD471	M.RESISTOR CH 1/10W 470	1	
R7	ERJ6GEYG152	M.RESISTOR CH 1/10W 1.5K	1	
R8	ERJ6GEYG563	M.RESISTOR CH 1/10W 56K	1	
R9,10	ERJ6GEYG104	M.RESISTOR CH 1/10W 100K	2	
R11	ERJ6GEYG563	M.RESISTOR CH 1/10W 56K	1	
R12,13	ERJ6GEYG103	M.RESISTOR CH 1/10W 10K	2	
R14	ERJ6GEYJ274	M.RESISTOR CH 1/10W 270K	1	
R15	ERJ6GEYG823	M.RESISTOR CH 1/10W 82K	1	
R16	ERJ6GEYG153	M.RESISTOR CH 1/10W 15K	1	
R17	ERJ6GEYG272	M.RESISTOR CH 1/10W 2.7K	1	
R18	ERJ6GEYG823	M.RESISTOR CH 1/10W 82K	1	
R19,20	ERJ6GEYG103	M.RESISTOR CH 1/10W 10K	2	
R21	ERJ6GEYG104	M.RESISTOR CH 1/10W 100K	1	
R25-29	ERJ6GEY0R00	M.RESISTOR CH 1/10W 0	5	
R31	ERJ6GEYG183	M.RESISTOR CH 1/10W 18K	1	
R32	ERJ6GEYG103	M.RESISTOR CH 1/10W 10K	1	
R33	ERJ6RBD122	M.RESISTOR CH 1/10W 1.2K	1	
R34	ERJ6RBD563	M.RESISTOR CH 1/10W 56K	1	
R35	ERJ6GEYG223	M.RESISTOR CH 1/10W 22K	1	
R36	ERJ6RBD562	M.RESISTOR CH 1/10W 5.6K	1	
R37	ERJ6RBD823	M.RESISTOR CH 1/10W 82K	1	
R38,39	ERJ6RBD222	M.RESISTOR CH 1/10W 2.2K	2	
R40	ERJ6GEYG222	M.RESISTOR CH 1/10W 2.2K	1	
R41	ERJ6GEYG562	M.RESISTOR CH 1/10W 5.6K	1	
R42	ERJ6GEYG682	M.REISITOR CH 1/10W 6.8K	1	
R43-45	ERJ6GEYG103	M.RESISTOR CH 1/10W 10K	3	
R46	ERJ6GEY0R00	M.RESISTOR CH 1/10W 0	1	
R48	ERJ6GEYG103	M.RESISTOR CH 1/10W 10K	1	
R49	ERJ6GEYG222	M.RESISTOR CH 1/10W 2.2K	1	
R50	ERJ6RBD471	M.RESISTOR CH 1/10W 470	1	
R51	ERJ6RBD562	M.RESISTOR CH 1/10W 5.6K	1	
R52	ERJ6RBD471	M.RESISTOR CH 1/10W 470	1	
R53	ERJ6RBD823	M.RESISTOR CH 1/10W 82K	1	
R54	ERJ6GEYG562	M.RESISTOR CH 1/10W 5.6K	1	
R55	ERJ6GEYG682	M.REISITOR CH 1/10W 6.8K	1	
R56-59	ERJ6GEY0R00	M.RESISTOR CH 1/10W 0	4	
R60	ERJ6GEYG101	M.RESISTOR CH 1/10W 100	1	
R61-77	ERJ6GEY0R00	M.RESISTOR CH 1/10W 0	17	
R80,81	ERJ6GEYG222	M.RESISTOR CH 1/10W 2.2K	2	
R82,83	ERJ6RBD223	M.RESISTOR CH 1/10W 22K	2	
R84	ERJ6GEYG474	M.RESISTOR CH 1/10W 470K	1	
R85	ERJ6GEYG103	M.RESISTOR CH 1/10W 10K	1	
R86	ERJ6GEYG474	M.RESISTOR CH 1/10W 470K	1	
R87,88	ERJ6GEYG103	M.RESISTOR CH 1/10W 10K	2	
R89,90	ERJ6GEYG224	M.RESISTOR CH 1/10W 220K	2	
R91,92	ERJ6GEYG154	M.RESISTOR CH 1/10W 150K	2	
R93	ERJ6GEYG562	M.RESISTOR CH 1/10W 5.6K	1	
R94	ERJ6GEYG224	M.RESISTOR CH 1/10W 220K	1	

Ref.No.	Part No.	Part Name & Description	Pcs	Remarks
R95	ERJ6GEYG562	M.RESISTOR CH 1/10W 5.6K	1	
R96	ERJ6GEYG273	M.RESISTOR CH 1/10W 27K	1	
R97	ERJ6GEYF333	M.RESISTOR CH 1/10W 33K	1	
R98,99	ERJ6GEYG222	M.RESISTOR CH 1/10W 2.2K	2	
R100,01	ERJ6GEYG103	M.RESISTOR CH 1/10W 10K	2	
R102,03	ERJ6GEYG224	M.RESISTOR CH 1/10W 220K	2	
R104	ERJ6GEYG562	M.RESISTOR CH 1/10W 5.6K	1	
R105	ERJ6GEYG224	M.RESISTOR CH 1/10W 220K	1	
R106	ERJ6GEYG562	M.RESISTOR CH 1/10W 5.6K	1	
R107	ERJ6GEYG273	M.RESISTOR CH 1/10W 27K	1	
R108	ERJ6GEYF333	M.RESISTOR CH 1/10W 33K	1	
R109	ERJ6GEYG103	M.RESISTOR CH 1/10W 10K	1	
R120,21	ERJ6GEYG222	M.RESISTOR CH 1/10W 2.2K	2	
R122,23	ERJ6RBD223	M.RESISTOR CH 1/10W 22K	2	
R124	ERJ6GEYG103	M.RESISTOR CH 1/10W 10K	1	
R125	ERJ6GEYG474	M.RESISTOR CH 1/10W 470K	1	
R126	ERJ6GEYG103	M.RESISTOR CH 1/10W 10K	1	
R127	ERJ6GEYG474	M.RESISTOR CH 1/10W 470K	1	
R128,29	ERJ6GEYG103	M.RESISTOR CH 1/10W 10K	2	
R130,31	ERJ6RED224	M.RESISTOR CH 1/10W 220K	2	
R132,33	ERJ6GEYG154	M.RESISTOR CH 1/10W 150K	2	
R134	ERJ6GEYG103	M.RESISTOR CH 1/10W 10K	1	
R135	ERJ6GEYG224	M.RESISTOR CH 1/10W 220K	1	
R136	ERJ6GEYG562	M.RESISTOR CH 1/10W 5.6K	1	
R137	ERJ6GEYG273	M.RESISTOR CH 1/10W 27K	1	
R138	ERJ6GEYF333	M.RESISTOR CH 1/10W 33K	1	
R139,40	ERJ6GEYG222	M.RESISTOR CH 1/10W 2.2K	2	
R141,42	ERJ6GEYG103	M.RESISTOR CH 1/10W 10K	2	
R143,44	ERJ6RED224	M.RESISTOR CH 1/10W 220K	2	
R145	ERJ6GEYG103	M.RESISTOR CH 1/10W 10K	1	
R146	ERJ6GEYG224	M.RESISTOR CH 1/10W 220K	1	
R147	ERJ6GEYG562	M.RESISTOR CH 1/10W 5.6K	1	
R148	ERJ6GEYG273	M.RESISTOR CH 1/10W 27K	1	
R149	ERJ6GEYF333	M.RESISTOR CH 1/10W 33K	1	
R160,61	ERJ6GEYG222	M.RESISTOR CH 1/10W 2.2K	2	
R162,63	ERJ6RBD223	M.RESISTOR CH 1/10W 22K	2	
R164	ERJ6GEYG103	M.RESISTOR CH 1/10W 10K	1	
R165	ERJ6GEYG474	M.RESISTOR CH 1/10W 470K	1	
R166	ERJ6GEYG103	M.RESISTOR CH 1/10W 10K	1	
R167	ERJ6GEYG474	M.RESISTOR CH 1/10W 470K	1	
R168,69	ERJ6GEYG103	M.RESISTOR CH 1/10W 10K	2	
R170,71	ERJ6RED224	M.RESISTOR CH 1/10W 220K	2	
R172	ERJ6GEYG103	M.RESISTOR CH 1/10W 10K	1	
R173	ERJ6GEYG224	M.RESISTOR CH 1/10W 220K	1	
R174	ERJ6GEYG562	M.RESISTOR CH 1/10W 5.6K	1	
R175	ERJ6GEYG273	M.RESISTOR CH 1/10W 27K	1	
R176	ERJ6GEYF333	M.RESISTOR CH 1/10W 33K	1	
R177,78	ERJ6GEYG154	M.RESISTOR CH 1/10W 150K	2	
R179,80	ERJ6GEYG222	M.RESISTOR CH 1/10W 2.2K	2	
R181,82	ERJ6GEYG103	M.RESISTOR CH 1/10W 10K	2	
R183,84	ERJ6RED224	M.RESISTOR CH 1/10W 220K	2	
R185	ERJ6GEYG103	M.RESISTOR CH 1/10W 10K	1	
R186	ERJ6GEYG224	M.RESISTOR CH 1/10W 220K	1	
R187	ERJ6GEYG562	M.RESISTOR CH 1/10W 5.6K	1	
R188	ERJ6GEYG273	M.RESISTOR CH 1/10W 27K	1	
R189	ERJ6GEYF333	M.RESISTOR CH 1/10W 33K	1	
R200	ERJ6GEYG223	M.RESISTOR CH 1/10W 22K	1	
R201,02	ERJ6GEYG222	M.RESISTOR CH 1/10W 2.2K	2	
R203	ERJ6GEYG471	M.RESISTOR CH 1/10W 470	1	
R204	ERJ6RBD303	M.RESISTOR CH 1/10W 30K	1	
R205	ERJ6RBD153	M.RESISTOR CH 1/10W 15K	1	
R206	ERJ6GEYG102	M.RESISTOR CH 1/10W 1K	1	
R207	ERJ6GEYG223	M.RESISTOR CH 1/10W 22K	1	
R208	ERJ6GEYG222	M.RESISTOR CH 1/10W 2.2K	1	
R209	ERJ6GEYG223	M.RESISTOR CH 1/10W 22K	1	
R210	ERJ6GEYG222	M.RESISTOR CH 1/10W 2.2K	1	
R211	ERJ6GEYG223	M.RESISTOR CH 1/10W 22K	1	
R212,13	ERJ6GEYG222	M.RESISTOR CH 1/10W 2.2K	2	
R214	ERJ6GEYG471	M.RESISTOR CH 1/10W 470	1	
R215,16	ERJ6GEYF561	M.RESISTOR CH 1/10W 560	2	
R217,18	ERJ6GEYG102	M.RESISTOR CH 1/10W 1K	2	
R219	ERJ6GEYG101	M.RESISTOR CH 1/10W 100	1	
R220-22	ERJ6GEY0R00	M.RESISTOR CH 1/10W 0	3	
R223	ERJ6GEYG103	M.RESISTOR CH 1/10W 10K	1	
R232	ERJ6GEY0R00	M.RESISTOR CH 1/10W 0	1	

Ref.No.	Part No.	Part Name & Description	Pcs	Remarks
R234	ERJ6GEYG103	M.RESISTOR CH 1/10W 10K	1	
R235-43	ERJ6GEYG562	M.RESISTOR CH 1/10W 5.6K	9	
R244	ERJ6GEYG101	M.RESISTOR CH 1/10W 100	1	
R245	ERJ6GEYG103	M.RESISTOR CH 1/10W 10K	1	
R246	ERJ6GEYG102	M.RESISTOR CH 1/10W 1K	1	
R247	ERJ6GEY0R00	M.RESISTOR CH 1/10W 0	1	
R248-51	ERJ6GEYG562	M.RESISTOR CH 1/10W 5.6K	4	
R252	ERJ6GEYG104	M.RESISTOR CH 1/10W 100K	1	
R253	ERJ6GEYJ301	M.RESISTOR CH 1/10W 300	1	
R254	ERJ6GEYF473	M.RESISTOR CH 1/10W 47K	1	
R255	ERJ6GEY0R00	M.RESISTOR CH 1/10W 0	1	
R257	ERJ6GEYG562	M.RESISTOR CH 1/10W 5.6K	1	
R259,60	ERJ6GEY0R00	M.RESISTOR CH 1/10W 0	2	
R261	ERJ6GEYG101	M.RESISTOR CH 1/10W 100	1	
R262	ERJ6GEYF473	M.RESISTOR CH 1/10W 47K	1	
R263,64	ERJ6GEYG101	M.RESISTOR CH 1/10W 100	2	
R265	ERJ6GEYF473	M.RESISTOR CH 1/10W 47K	1	
R266	ERJ6GEYG152	M.RESISTOR CH 1/10W 1.5K	1	
R267-69	ERJ6GEYG101	M.RESISTOR CH 1/10W 100	3	
R270,71	ERJ6GEY0R00	M.RESISTOR CH 1/10W 0	2	
R275-78	ERJ6GEY0R00	M.RESISTOR CH 1/10W 0	4	
R280	ERJ6GEY0R00	M.RESISTOR CH 1/10W 0	1	
R281,82	ERJ6GEYG471	M.RESISTOR CH 1/10W 470	2	
R283-85	ERJ6GEYG101	M.RESISTOR CH 1/10W 100	3	
R286,87	ERJ6GEY0R00	M.RESISTOR CH 1/10W 0	2	
R300	ERJ6GEYG104	M.RESISTOR CH 1/10W 100K	1	
R301	ERJ6GEYG102	M.RESISTOR CH 1/10W 1K	1	
R303,04	ERJ6GEY0R00	M.RESISTOR CH 1/10W 0	2	
R305-13	ERJ6GEYG103	M.RESISTOR CH 1/10W 10K	9	
R314-16	ERJ6GEYG821	M.RESISTOR CH 1/10W 820	3	
R318,19	ERJ6GEYG101	M.RESISTOR CH 1/10W 100	2	
R320	ERJ6GEYG222	M.RESISTOR CH 1/10W 2.2K	1	
R321	ERJ6GEYG332	M.RESISTOR CH 1/10W 3.3K	1	
R322-24	ERJ6GEYG222	M.RESISTOR CH 1/10W 2.2K	3	
R325	ERJ6GEYG682	M.REISITOR CH 1/10W 6.8K	1	
R326	ERJ6GEYG102	M.RESISTOR CH 1/10W 1K	1	
R327-29	ERJ6GEYG332	M.RESISTOR CH 1/10W 3.3K	3	
R330	ERJ6GEYG104	M.RESISTOR CH 1/10W 100K	1	
R331	ERJ6GEYG221	M.RESISTOR CH 1/10W 220	1	
R332	ERJ6GEYG102	M.RESISTOR CH 1/10W 1K	1	
R333	ERJ6GEYF473	M.RESISTOR CH 1/10W 47K	1	
R334	ERJ6GEYG331	M.RESISTOR CH 1/10W 330	1	
R336,37	ERJ6GEYF472	M.RESISTOR CH 1/10W 4.7K	2	
R338,39	ERJ6GEYG101	M.RESISTOR CH 1/10W 100	2	
R340	ERJ6GEYG331	M.RESISTOR CH 1/10W 330	1	
R341	ERJ6GEYG471	M.RESISTOR CH 1/10W 470	1	
R342	ERJ6GEYG153	M.RESISTOR CH 1/10W 15K	1	
R343	ERJ6GEYG474	M.RESISTOR CH 1/10W 470K	1	
R344	ERJ6GEYG122	M.RESISTOR CH 1/10W 1.2K	1	
R345	ERJ6GEYG394	M.RESISTOR CH 1/10W 390K	1	
R346	ERJ6GEYG102	M.RESISTOR CH 1/10W 1K	1	
R347	ERJ6GEYG563	M.RESISTOR CH 1/10W 56K	1	
R348	ERJ6GEYG103	M.RESISTOR CH 1/10W 10K	1	
R349	ERJ6GEYF473	M.RESISTOR CH 1/10W 47K	1	
R350	ERJ6GEYG183	M.RESISTOR CH 1/10W 18K	1	
R351-53	ERJ6GEYG103	M.RESISTOR CH 1/10W 10K	3	
R354	ERJ6GEYG104	M.RESISTOR CH 1/10W 100K	1	
R355	ERJ6GEYG103	M.RESISTOR CH 1/10W 10K	1	
R356	ERJ6GEYG104	M.RESISTOR CH 1/10W 100K	1	
R357	ERJ6GEYG103	M.RESISTOR CH 1/10W 10K	1	
R358	ERJ6GEYG394	M.RESISTOR CH 1/10W 390K	1	
R359	ERJ6GEYG102	M.RESISTOR CH 1/10W 1K	1	
R360	ERJ6GEYG183	M.RESISTOR CH 1/10W 18K	1	
R361	ERJ6GEYF473	M.RESISTOR CH 1/10W 47K	1	
R362,63	ERJ6GEYG104	M.RESISTOR CH 1/10W 100K	2	
R364	ERJ6GEYG183	M.RESISTOR CH 1/10W 18K	1	
R365	ERJ6GEYG474	M.RESISTOR CH 1/10W 470K	1	
R366	ERJ6GEYG153	M.RESISTOR CH 1/10W 15K	1	
R367	ERJ6GEYG103	M.RESISTOR CH 1/10W 10K	1	
R368	ERJ6GEYG102	M.RESISTOR CH 1/10W 1K	1	
R369	ERJ6GEYG331	M.RESISTOR CH 1/10W 330	1	
R370	ERJ6GEYG103	M.RESISTOR CH 1/10W 10K	1	
R371	ERJ6GEYG563	M.RESISTOR CH 1/10W 56K	1	
R372	ERJ6GEYG471	M.RESISTOR CH 1/10W 470	1	
R373	ERJ6GEYG122	M.RESISTOR CH 1/10W 1.2K	1	

Ref.No.	Part No.	Part Name & Description	Pcs	Remarks
R374,75	ERJ6GEY0R00	M.RESISTOR CH 1/10W 0	2	
R380	ERJ6GEYG102	M.RESISTOR CH 1/10W 1K	1	
R381	ERJ6GEYG681	M.RESISTOR CH 1/10W 680	1	
R382	ERJ6GEYG471	M.RESISTOR CH 1/10W 470	1	
R383	ERJ6GEYG102	M.RESISTOR CH 1/10W 1K	1	
R384	ERJ6GEYG681	M.RESISTOR CH 1/10W 680	1	
R385	ERJ6GEYG471	M.RESISTOR CH 1/10W 470	1	
R400,01	ERJ6GEYG471	M.RESISTOR CH 1/10W 470	2	
R402	ERJ6RBD333	M.RESISTOR CH 1/10W 33K	1	
R403	ERJ6RBD222	M.RESISTOR CH 1/10W 2.2K	1	
R404,05	ERJ12YJR68	M.RESISTOR CH 1/2W 0.68	2	
R406,07	ERJ6GEYG474	M.RESISTOR CH 1/10W 470K	2	
R408	ERJ6GEYG222	M.RESISTOR CH 1/10W 2.2K	1	
R409	ERJ6GEYG154	M.RESISTOR CH 1/10W 150K	1	
R410	ERJ6GEYG272	M.RESISTOR CH 1/10W 2.7K	1	
R411	ERJ6GEYJ274	M.RESISTOR CH 1/10W 270K	1	
R412	ERJ6GEYG272	M.RESISTOR CH 1/10W 2.7K	1	
R413	ERJ6GEYG273	M.RESISTOR CH 1/10W 27K	1	
R414,15	ERJ6GEYG223	M.RESISTOR CH 1/10W 22K	2	
R416	ERJ6GEYG122	M.RESISTOR CH 1/10W 1.2K	1	
R417	ERJ6GEYG224	M.RESISTOR CH 1/10W 220K	1	
R418	ERJ6GEYG272	M.RESISTOR CH 1/10W 2.7K	1	
R419	ERJ6GEYG223	M.RESISTOR CH 1/10W 22K	1	
R420	ERJ6GEYF472	M.RESISTOR CH 1/10W 4.7K	1	
R421	ERJ6GEYJ274	M.RESISTOR CH 1/10W 270K	1	
R422	ERJ6GEYG272	M.RESISTOR CH 1/10W 2.7K	1	
R423	ERJ6GEY0R00	M.RESISTOR CH 1/10W 0	1	
R424,25	ERJ6GEYG223	M.RESISTOR CH 1/10W 22K	2	
R426	ERJ6RBD333	M.RESISTOR CH 1/10W 33K	1	
R427	ERJ6RBD222	M.RESISTOR CH 1/10W 2.2K	1	
R428,29	ERJ6GEYG471	M.RESISTOR CH 1/10W 470	2	
R430,31	ERJ12YJR68	M.RESISTOR CH 1/2W 0.68	2	
R432,33	ERJ6GEYF473	M.RESISTOR CH 1/10W 47K	2	
R436,37	ERJ6GEY0R00	M.RESISTOR CH 1/10W 0	2	
R450	ERJ6RBD472	M.RESISTOR CH 1/10W 4.7K	1	
R451	ERJ6RBD122	M.RESISTOR CH 1/10W 1.2K	1	
R452	ERJ6GEYG102	M.RESISTOR CH 1/10W 1K	1	
R453-55	ERJ6GEYG330	M.RESISTOR CH 1/10W 33	3	
R456,57	ERJ12YJ2R2	M.RESISTOR CH 1/2W 2.2	2	
R458	ERJ6GEYF393	M.RESISTOR CH 1/10W 39K	1	
R459	ERJ6GEYF123	M.RESISTOR CH 1/10W 12K	1	
R460	ERJ6GEYG271	M.RESISTOR CH 1/10W 270	1	
R461	ERJ6RBD472	M.RESISTOR CH 1/10W 4.7K	1	
R462	ERJ6RBD122	M.RESISTOR CH 1/10W 1.2K	1	
R463	ERJ6GEYG102	M.RESISTOR CH 1/10W 1K	1	
R464,65	ERJ6GEYG330	M.RESISTOR CH 1/10W 33	2	
R466,67	ERJ12YJ2R2	M.RESISTOR CH 1/2W 2.2	2	
R468	ERJ6GEYF393	M.RESISTOR CH 1/10W 39K	1	
R469	ERJ6GEYF123	M.RESISTOR CH 1/10W 12K	1	
R470	ERJ6GEYG271	M.RESISTOR CH 1/10W 270	1	
R471	ERJ6GEYG330	M.RESISTOR CH 1/10W 33	1	
R510	ERJ6GEYF561	M.RESISTOR CH 1/10W 560	1	
R511,12	ERJ6RBD391	M.RESISTOR CH 1/10W 390	2	
R513	ERJ6GEYF561	M.RESISTOR CH 1/10W 560	1	
R514-17	ERJ6RBD391	M.RESISTOR CH 1/10W 390	4	
R550-59	ERJ6GEY0R00	M.RESISTOR CH 1/10W 0	10	
R600-02	ERJ6GEY0R00	M.RESISTOR CH 1/10W 0	3	
R603-06	ERJ6GEYG101	M.RESISTOR CH 1/10W 100	4	
R607	ERJ6GEY0R00	M.RESISTOR CH 1/10W 0	1	
R609	ERJ6GEY0R00	M.RESISTOR CH 1/10W 0	1	
R621	ERJ6GEYG153	M.RESISTOR CH 1/10W 15K	1	
R622-27	ERJ6GEYG103	M.RESISTOR CH 1/10W 10K	6	
R628	ERJ6GEYG102	M.RESISTOR CH 1/10W 1K	1	
R629,30	ERJ6GEY0R00	M.RESISTOR CH 1/10W 0	2	
R631,32	ERJ6GEYG103	M.RESISTOR CH 1/10W 10K	2	
R640	ERJ6GEYG103	M.RESISTOR CH 1/10W 10K	1	
R650,51	ERJ6GEYG562	M.RESISTOR CH 1/10W 5.6K	2	
R652	ERJ6RBD682	M.RESISTOR CH 1/10W 6.8K	1	
R653	ERJ6RBD102	M.RESISTOR CH 1/10W 1K	1	
R654	ERJ6GEYG103	M.RESISTOR CH 1/10W 10K	1	
R655	ERJ6GEYG332	M.RESISTOR CH 1/10W 3.3K	1	
R656	ERJ6GEYG101	M.RESISTOR CH 1/10W 100	1	
R736	ERJ6GEY0R00	M.RESISTOR CH 1/10W 0	1	
R751	ERJ6GEY0R00	M.RESISTOR CH 1/10W 0	1	
R762	ERJ6GEY0R00	M.RESISTOR CH 1/10W 0	1	

Ref.No.	Part No.	Part Name & Description	Pcs	Remarks
R765,66	ERJ6GEY0R00	M.RESISTOR CH 1/10W 0	2	
R769	ERJ6GEY0R00	M.RESISTOR CH 1/10W 0	1	
R777	ERJ6GEY0R00	M.RESISTOR CH 1/10W 0	1	
TG510,11	VJR0646	TEST POINT	2	
TP1	VJR0646	TEST POINT	1	
TP2	EYF6CU	TEST POINT	1	
TP30,31	VJR0646	TEST POINT	2	
TP32,33	EYF6CU	TEST POINT	2	
TP34,35	VJR0646	TEST POINT	2	
TP60	VJR0646	TEST POINT	1	
TP80-83	VJR0646	TEST POINT	4	
TP120-23	VJR0646	TEST POINT	4	
TP160-63	VJR0646	TEST POINT	4	
TP200	EYF6CU	TEST POINT	1	
TP201	VJR0646	TEST POINT	1	
TP202	EYF6CU	TEST POINT	1	
TP230-34	VJR0646	TEST POINT	5	
TP280	VJR0646	TEST POINT	1	
TP300-02	VJR0646	TEST POINT	3	
TP320,21	VJR0646	TEST POINT	2	
TP400,01	VJR0646	TEST POINT	2	
TP450,51	VJR0646	TEST POINT	2	
X230	VSX0918	CRYSTAL OSCILLATOR	1	
X320	VSX0645	CRYSTAL OSCILLATOR	1	
		MISCELLANEOUS		
	VML2143	CARD PULLER	1	
	VML2144	CARD PULLER	1	
■E3	VEP86267A	F2 SYSCON P.C.BOARD	1	(RTL)FOR AJ-D850P
■E3	VEP86267B	F2 SYSCON P.C.BOARD	1	(RTL)FOR AJ-D850E
C1	ECUM1E104ZFN	C.CAPACITOR CH 25V 0.1U	1	
C9	ECUM1E104ZFN	C.CAPACITOR CH 25V 0.1U	1	
C10,11	ECUM1H150JCN	C.CAPACITOR CH 50V 15P	2	
C12	ECUM1E104ZFN	C.CAPACITOR CH 25V 0.1U	1	
C13	ECQB1H104JF	P.CAPACITOR 50V 0.1U	1	
C14	ECEV1EN4R7Q	E.CAPACITOR CH 25V 4.7U	1	
C15	ECUM1E104ZFN	C.CAPACITOR CH 25V 0.1U	1	
C16-26	ECUM1H103KBN	C.CAPACITOR CH 50V 0.01U	11	
C27-29	ECUM1E104ZFN	C.CAPACITOR CH 25V 0.1U	3	
C30	ECUM1H103KBN	C.CAPACITOR CH 50V 0.01U	1	
C32-34	ECUM1H103KBN	C.CAPACITOR CH 50V 0.01U	3	
C35	ECUM1H470JCN	C.CAPACITOR CH 50V 47P	1	
C36,37	ECUM1E104ZFN	C.CAPACITOR CH 25V 0.1U	2	
C38	ECUM1H103KBN	C.CAPACITOR CH 50V 0.01U	1	
C46	ECUM1H103KBN	C.CAPACITOR CH 50V 0.01U	1	
C47	ECUM1E104ZFN	C.CAPACITOR CH 25V 0.1U	1	
C49	ECUX1C105ZFN	C.CAPACITOR CH 16V 1U	1	
C51	ECUX1C105ZFN	C.CAPACITOR CH 16V 1U	1	
C53	ECUX1C105ZFN	C.CAPACITOR CH 16V 1U	1	
C55	ECUX1C105ZFN	C.CAPACITOR CH 16V 1U	1	
C56-58	ECUM1H103KBN	C.CAPACITOR CH 50V 0.01U	3	
C59,60	ECEV1CV470Q	E.CAPACITOR CH 16V 47U	2	
C65	ECEV1CV470Q	E.CAPACITOR CH 16V 47U	1	
C66	ECA1CHG682	E.CAPACITOR 16V 6800U	1	
C67	ECUM1E104ZFN	C.CAPACITOR CH 25V 0.1U	1	
C68,69	ECUX1E104KBN	C.CAPACITOR CH 25V 0.1U	2	
C70,71	ECUM1H103KBN	C.CAPACITOR CH 50V 0.01U	2	
C72	ECEV1CV100Q	E.CAPACITOR CH 16V 10U	1	
C73	ECUM1E104ZFN	C.CAPACITOR CH 25V 0.1U	1	
C74	ECEV1CV470Q	E.CAPACITOR CH 16V 47U	1	
C76	ECA1CHG682	E.CAPACITOR 16V 6800U	1	
C77,78	ECUM1H103KBN	C.CAPACITOR CH 50V 0.01U	2	
C79	ECUX1C105ZFN	C.CAPACITOR CH 16V 1U	1	
C81	ECUX1C105ZFN	C.CAPACITOR CH 16V 1U	1	
C83	ECUM1E104ZFN	C.CAPACITOR CH 25V 0.1U	1	
C86,87	ECUM1H103KBN	C.CAPACITOR CH 50V 0.01U	2	
C88-90	ECUM1E104ZFN	C.CAPACITOR CH 25V 0.1U	3	

Ref.No.	Part No.	Part Name & Description	Pcs	Remarks
C91	ECUX1E105KBP	C.CAPACITOR CH 25V 1U	1	
C92	ECUX1C106KBP	C.CAPACITOR CH 16V 10U	1	
C93	ECEV1CV100Q	E.CAPACITOR CH 16V 10U	1	
C94-96	ECEV1CV470Q	E.CAPACITOR CH 16V 47U	3	
C97	ECUM1E104ZFN	C.CAPACITOR CH 25V 0.1U	1	
C98	ECUM1H103KBN	C.CAPACITOR CH 50V 0.01U	1	
C99	ECUM1E104ZFN	C.CAPACITOR CH 25V 0.1U	1	
C100	ECUM1H221JCN	C.CAPACITOR CH 50V 220P	1	
C101	ECEV1CV470Q	E.CAPACITOR CH 16V 47U	1	
C500,01	ECUM1H120JCN	C.CAPACITOR CH 50V 12P	2	
C502	ECUM1H103KBN	C.CAPACITOR CH 50V 0.01U	1	
C503-06	ECUM1E104ZFN	C.CAPACITOR CH 25V 0.1U	4	
C508-13	ECUM1H103KBN	C.CAPACITOR CH 50V 0.01U	6	
C514-19	ECUM1E104ZFN	C.CAPACITOR CH 25V 0.1U	6	
C520-22	ECUM1H103KBN	C.CAPACITOR CH 50V 0.01U	3	
C523	ECUM1H331JCN	C.CAPACITOR CH 50V 330P	1	
C524	ECUM1E104ZFN	C.CAPACITOR CH 25V 0.1U	1	
C525	ECUM1H103KBN	C.CAPACITOR CH 50V 0.01U	1	
C526,27	ECUX1H102JCN	C.CAPACITOR CH 50V 1000P	2	
C528-35	ECUM1H103KBN	C.CAPACITOR CH 50V 0.01U	8	
C536	ECEV1CV100Q	E.CAPACITOR CH 16V 10U	1	
C537,38	ECUM1E104ZFN	C.CAPACITOR CH 25V 0.1U	2	
C543-45	ECUM1H103KBN	C.CAPACITOR CH 50V 0.01U	3	
C547	ECUM1H103KBN	C.CAPACITOR CH 50V 0.01U	1	
C548	ECUM1E104ZFN	C.CAPACITOR CH 25V 0.1U	1	
C549,50	ECUM1H103KBN	C.CAPACITOR CH 50V 0.01U	2	
C551,52	ECUM1E104ZFN	C.CAPACITOR CH 25V 0.1U	2	
C703-13	ECUM1E104ZFN	C.CAPACITOR CH 25V 0.1U	11	
C714	ECUM1H103KBN	C.CAPACITOR CH 50V 0.01U	1	
C715,16	ECUM1H100DCN	C.CAPACITOR CH 50V 10P	2	
C717-21	ECUM1E104ZFN	C.CAPACITOR CH 25V 0.1U	5	
C722,23	ECUM1H050CCN	C.CAPACITOR CH 50V 5P	2	
C724,25	ECUM1E104ZFN	C.CAPACITOR CH 25V 0.1U	2	
C726	ECUM1H120JCN	C.CAPACITOR CH 50V 12P	1	
C727	ECUM1H150JCN	C.CAPACITOR CH 50V 15P	1	
C728	ECEV0JV470Q	E.CAPACITOR CH6.3V 47U	1	
C729	ECUX1H102JCN	C.CAPACITOR CH 50V 1000P	1	
C730	ECUX1H682KBN	C.CAPACITOR CH 50V 6800P	1	
C731	ECEV1CV100Q	E.CAPACITOR CH 16V 10U	1	
C732	ECUM1H103KBN	C.CAPACITOR CH 50V 0.01U	1	
C733,34	ECEV1EN4R7Q	E.CAPACITOR CH 25V 4.7U	2	
C735	ECUM1H103KBN	C.CAPACITOR CH 50V 0.01U	1	
C736	ECA1CAXN330	E.CAPACITOR 16V 33U	1	
C737	ECUM1H103KBN	C.CAPACITOR CH 50V 0.01U	1	
C738	ECA1CAXN330	E.CAPACITOR 16V 33U	1	
C739,40	ECUM1H103KBN	C.CAPACITOR CH 50V 0.01U	2	
C741	ECEV1EN4R7Q	E.CAPACITOR CH 25V 4.7U	1	
C742	ECUM1H120JCN	C.CAPACITOR CH 50V 12P	1	
C743	ECEV1CV100Q	E.CAPACITOR CH 16V 10U	1	
C744,45	ECEV1EN4R7Q	E.CAPACITOR CH 25V 4.7U	2	
C746	ECUM1H103KBN	C.CAPACITOR CH 50V 0.01U	1	
C747-61	ECUM1E104ZFN	C.CAPACITOR CH 25V 0.1U	15	
C762	ECEV1CV470Q	E.CAPACITOR CH 16V 47U	1	
C763	ECUM1E104ZFN	C.CAPACITOR CH 25V 0.1U	1	
C764	ECEV1CV470Q	E.CAPACITOR CH 16V 47U	1	
C765	ECUM1E104ZFN	C.CAPACITOR CH 25V 0.1U	1	
C766	ECEV1CV470Q	E.CAPACITOR CH 16V 47U	1	
C767	ECUM1H103KBN	C.CAPACITOR CH 50V 0.01U	1	
C768	ECEV1CV470Q	E.CAPACITOR CH 16V 47U	1	
C769	ECUM1H103KBN	C.CAPACITOR CH 50V 0.01U	1	
C770	ECUX1H561JCN	C.CAPACITOR CH 50V 560P	1	
C771	ECUM1H821JCN	C.CAPACITOR CH 50V 820P	1	
C772,73	ECUM1H103KBN	C.CAPACITOR CH 50V 0.01U	2	
C774	ECEV1EN4R7Q	E.CAPACITOR CH 25V 4.7U	1	
C775	ECUM1E104ZFN	C.CAPACITOR CH 25V 0.1U	1	
C776	ECUM1H103KBN	C.CAPACITOR CH 50V 0.01U	1	
C777-80	ECUM1E104ZFN	C.CAPACITOR CH 25V 0.1U	4	
C781,82	ECUM1H103KBN	C.CAPACITOR CH 50V 0.01U	2	
C783	ECUM1E104ZFN	C.CAPACITOR CH 25V 0.1U	1	
C784	ECUM1H103KBN	C.CAPACITOR CH 50V 0.01U	1	
C785	ECUM1E104ZFN	C.CAPACITOR CH 25V 0.1U	1	
C800-03	ECUM1H103KBN	C.CAPACITOR CH 50V 0.01U	4	
C804-09	ECUM1E104ZFN	C.CAPACITOR CH 25V 0.1U	6	
C900,01	ECEV1CV470Q	E.CAPACITOR CH 16V 47U	2	
C902,03	ECUM1E104ZFN	C.CAPACITOR CH 25V 0.1U	2	

Ref.No.	Part No.	Part Name & Description	Pcs	Remarks
C904-07	ECEV1CV470Q	E.CAPACITOR CH 16V 47U	4	
D1	MA157	DIODE	1	
D2-D5	MA715	DIODE	4	
D8	MA152WK	DIODE	1	
D9	MA3068-H	DIODE	1	
D10	MA3051-H	DIODE	1	
D11	MA3047-M	DIODE	1	
D12	MA3100-M	DIODE	1	
D13	MA3051-H	DIODE	1	
D14	MA3075-M	DIODE	1	
D15	21DQ04	DIODE	1	
D16	MA3051-H	DIODE	1	
D17	MA157	DIODE	1	
D18-22	MA152WK	DIODE	5	
D25-27	MA152WK	DIODE	3	
D28-43	MA738	DIODE	16	
D44	MA152WK	DIODE	1	
D45-48	NSQ03A04	DIODE	4	
D49,50	SN74S1051NS	IC	2	
D51	MA3062-L	DIODE	1	
D52	MA3082M	DIODE	1	
D53	MA3030-H	DIODE	1	
D54	MA738	DIODE	1	
D55	MA152WK	DIODE	1	
D500	MA152WK	DIODE	1	
D503	MA152WK	DIODE	1	
D504,05	MA715	DIODE	2	
D506	MA152WK	DIODE	1	
D507	MA715	DIODE	1	
D701-06	MA715	DIODE	6	
D709	MA715	DIODE	1	
D711-14	MA157	DIODE	4	
D715	MA152WK	DIODE	1	
D716-19	MA715	DIODE	4	
D720-22	SN74S1051NS	IC	3	
D723,24	MA715	DIODE	2	
FL701,02	VLF0576	FILTER	2	
FL900-03	VLF0576	FILTER	4	
IC1	M37702S4AFP	IC	1	
IC2	VSI2673A	IC	1	FOR VEP86267A
IC2	VSI2676	IC	1	FOR VEP86267B
IC3	74F573SJ	IC	1	
IC4	74F138SJ	IC	1	
IC5	74F573SJ	IC	1	
IC6	TL7705CPSB	IC	1	
IC7	MC74HC132AF	IC	1	
IC8	MC74HC04AF	IC	1	
IC9,10	74AC32SJ	IC	2	
IC11,12	74F32SJ	IC	2	
IC13	MC74HC74AF	IC	1	
IC14	74F11SJ	IC	1	
IC15	IDT71321A55	IC	1	
IC16	74F245SJ	IC	1	
IC17	STK14C88N45	IC	1	
IC19,20	74F541SJ	IC	2	
IC23	74F245SJ	IC	1	
IC24	UPD6456T611Y	IC	1	
IC26	TE7751	IC	1	
IC27,28	M54649L	IC	2	
IC29	NJM2901M	IC	1	
IC30	NJM2904M	IC	1	
IC31,32	MC14538BF	IC	2	
IC33	74F32SJ	IC	1	
IC34	74F00SJ	IC	1	
IC35	NJM2901M	IC	1	
IC36,37	TC7S14F	IC	2	
IC38	MC14538BF	IC	1	
IC39	NJM2904M	IC	1	
IC500	HD64180ZRP10	IC	1	
IC501,02	MC74HC541AF	IC	2	
IC503	VSI2674A	IC	1	FOR VEP86267A
IC504	K6256DLG7L	IC	1	

Ref.No.	Part No.	Part Name & Description	Pcs	Remarks
IC503	VSI2677	IC	1	FOR VEP86267B
IC505	IDT71321A55	IC	1	
IC506	MC74HC138AF	IC	1	
IC507	74F32SJ	IC	1	
IC508	MC74HC00AF	IC	1	
IC509	T74HC191AF	IC	1	
IC510	Z84C4310FEC	IC	1	
IC511,12	MC74HC126AF	IC	2	
IC513,14	SN75C1168NS	IC	2	
IC515	MC1488M	IC	1	
IC516	MC1489AM	IC	1	
IC517	MC14024BF	IC	1	
IC518	TE7751	IC	1	
IC519,20	MC14021BF	IC	2	
IC521,22	MC14094BF	IC	2	
IC523	MC74HC04AF	IC	1	
IC524	MC14050BF	IC	1	
IC525	SN74LS38NS	IC	1	
IC527	TE7751	IC	1	
IC528,29	MC14021BF	IC	2	
IC530,31	T74HC191AF	IC	2	
IC532	MC74HC574AF	IC	1	
IC701	M37702S4AFP	IC	1	
IC702	VSI2675	IC	1	FOR VEP86267A
IC702	VSI2678	IC	1	FOR VEP86267B
IC703	K6256DLG7L	IC	1	
IC704	74F573SJ	IC	1	
IC705,06	74F138SJ	IC	2	
IC707,08	74F32SJ	IC	2	
IC709	74F00SJ	IC	1	
IC710	MN51040VPI	IC	1	
IC711	MC74HC574AF	IC	1	
IC712	74AC32SJ	IC	1	
IC713	74F32SJ	IC	1	
IC714,15	74F541SJ	IC	2	
IC716	74F245SJ	IC	1	
IC717	74F541SJ	IC	1	
IC718	MC14053BF	IC	1	
IC719	NJM4560MD	IC	1	
IC720	NJM2068MD	IC	1	
IC721	UPC319G2	IC	1	
IC722	UPC4741G2	IC	1	
IC723	NJM78L09UA	IC	1	
IC724	NJM79L09UA	IC	1	
IC725,26	NJM084M	IC	2	
IC728,29	74F74SJ	IC	2	
IC730	74F32SJ	IC	1	
IC731	74F245SJ	IC	1	
IC732	74F08SJ	IC	1	
IC733	NJM084M	IC	1	
IC734	74F32SJ	IC	1	
IS2	VJS2336A032	CONNECTOR (FEMALE)	1	
IS503	VJS2336A032	CONNECTOR (FEMALE)	1	
IS702	VJS2336A032	CONNECTOR (FEMALE)	1	
L1	VLQ0163J270	COIL 27UH	1	
L2	VLQ0319K470	COIL 47UH	1	
L500-03	VLQ0576	COIL	4	
L701	VLQ0163J470	COIL 47UH	1	
L900-03	VLP0133	COIL	4	
LED1-D4	LN1251CAL	DIODE	4	
P1,P2	VJP3454B096	CONNECTOR (MALE)	2	
Q3	2SB710A-R	TRANSISTOR	1	
Q4	2SB936A-Q	TRANSISTOR	1	
Q5,Q6	2SD601A-R	TRANSISTOR	2	
Q7,Q8	2SB1073-R	TRANSISTOR	2	
Q9	2SD601A-R	TRANSISTOR	1	
Q10	2SB709A-R	TRANSISTOR	1	
Q11,12	2SD1119-R	TRANSISTOR	2	
Q13	2SB709A-R	TRANSISTOR	1	
Q14	2SD601A-R	TRANSISTOR	1	

Ref.No.	Part No.	Part Name & Description	Pcs	Remarks
Q15,16	2SB1073-R	TRANSISTOR	2	
Q17	2SD601A-R	TRANSISTOR	1	
Q18	2SB709A-R	TRANSISTOR	1	
Q19,20	2SD1119-R	TRANSISTOR	2	
Q21	2SB709A-R	TRANSISTOR	1	
Q22	2SD601A-R	TRANSISTOR	1	
Q23,24	2SB1175	TRANSISTOR	2	
Q25	2SD601A-R	TRANSISTOR	1	
Q26	2SB709A-R	TRANSISTOR	1	
Q27,28	2SD1747PQY	TRANSISTOR	2	
Q29	2SB709A-R	TRANSISTOR	1	
Q30	2SD601A-R	TRANSISTOR	1	
Q31,32	2SB1073-R	TRANSISTOR	2	
Q33	2SD601A-R	TRANSISTOR	1	
Q34	2SB709A-R	TRANSISTOR	1	
Q35,36	2SD1119-R	TRANSISTOR	2	
Q37	2SB709A-R	TRANSISTOR	1	
Q38	2SD601A-R	TRANSISTOR	1	
Q39	2SB936A-Q	TRANSISTOR	1	
Q701-03	2SD601A-R	TRANSISTOR	3	
Q704,05	2SB709A-R	TRANSISTOR	2	
QR3-10	UN2213	TRANSISTOR-RESISTOR	8	
QR11-16	UN2214	TRANSISTOR-RESISTOR	6	
QR17	UN2213	TRANSISTOR-RESISTOR	1	
QR18-26	UN2214	TRANSISTOR-RESISTOR	9	
QR27,28	UN2113	TRANSISTOR-RESISTOR	2	
QR29,30	UN2214	TRANSISTOR-RESISTOR	2	
QR31,32	UN2113	TRANSISTOR-RESISTOR	2	
QR33,34	UN2214	TRANSISTOR-RESISTOR	2	
QR35,36	UN2113	TRANSISTOR-RESISTOR	2	
QR37,38	UN2213	TRANSISTOR-RESISTOR	2	
QR39,40	UN2113	TRANSISTOR-RESISTOR	2	
QR41	UN2213	TRANSISTOR-RESISTOR	1	
QR43	UN2213	TRANSISTOR-RESISTOR	1	
QR44	UN2214	TRANSISTOR-RESISTOR	1	
QR701-03	UN221L	TRANSITOR-RESISTOR	3	
QR704,05	UN2214	TRANSISTOR-RESISTOR	2	
R1-R5	ERJ6GEYF473	M.RESISTOR CH 1/10W 47K	5	
R6-10	ERJ6GEYG103	M.RESISTOR CH 1/10W 10K	5	
R11,12	ERJ6GEYF822	M.RESISTOR CH 1/10W 8.2K	2	
R13,14	ERJ6GEYG103	M.RESISTOR CH 1/10W 10K	2	
R16	ERJ6GEYF473	M.RESISTOR CH 1/10W 47K	1	
R17	ERJ6GEYG394	M.RESISTOR CH 1/10W 390K	1	
R18,19	ERJ6GEYG102	M.RESISTOR CH 1/10W 1K	2	
R20	ERJ6GEYG103	M.RESISTOR CH 1/10W 10K	1	
R21,22	ERJ6GEYF473	M.RESISTOR CH 1/10W 47K	2	
R23,24	ERJ6GEYG103	M.RESISTOR CH 1/10W 10K	2	
R25,26	ERJ6GEYG102	M.RESISTOR CH 1/10W 1K	2	
R27,28	ERJ6GEYF473	M.RESISTOR CH 1/10W 47K	2	
R29	ERJ6GEYG103	M.RESISTOR CH 1/10W 10K	1	
R33-35	ERJ6GEYG103	M.RESISTOR CH 1/10W 10K	3	
R38,39	ERJ6GEYF473	M.RESISTOR CH 1/10W 47K	2	
R43	ERJ6GEYG271	M.RESISTOR CH 1/10W 270	1	
R44	ERJ6GEYF473	M.RESISTOR CH 1/10W 47K	1	
R45	ERJ6GEYG103	M.RESISTOR CH 1/10W 10K	1	
R46	ERJ6GEYF473	M.RESISTOR CH 1/10W 47K	1	
R47	ERJ6GEYG103	M.RESISTOR CH 1/10W 10K	1	
R48	ERJ6GEYG562	M.RESISTOR CH 1/10W 5.6K	1	
R49	ERJ6GEYG222	M.RESISTOR CH 1/10W 2.2K	1	
R54,55	ERJ6GEYF473	M.RESISTOR CH 1/10W 47K	2	
R56	ERJ6GEYG105	M.RESISTOR CH 1/10W 1M	1	
R57	ERJ6GEYG102	M.RESISTOR CH 1/10W 1K	1	
R58-61	ERJ6GEYG222	M.RESISTOR CH 1/10W 2.2K	4	
R62	ERJ6GEYG103	M.RESISTOR CH 1/10W 10K	1	
R63-70	ERJ6GEYF472	M.RESISTOR CH 1/10W 4.7K	8	
R71,72	ERJ6GEYF473	M.RESISTOR CH 1/10W 47K	2	
R73,74	ERJ6GEYG102	M.RESISTOR CH 1/10W 1K	2	
R75	ERJ6GEYG222	M.RESISTOR CH 1/10W 2.2K	1	
R76,77	ERJ6GEYG101	M.RESISTOR CH 1/10W 100	2	
R82	ERJ6GEYG104	M.RESISTOR CH 1/10W 100K	1	
R83	ERJ6GEYF473	M.RESISTOR CH 1/10W 47K	1	
R84-87	ERJ6GEYG104	M.RESISTOR CH 1/10W 100K	4	
R88	ERJ6GEYG104	M.RESISTOR CH 1/10W 100K	1	FOR VEP86267A

Ref.No.	Part No.	Part Name & Description	Pcs	Remarks
R89	ERJ6GEYG104	M.RESISTOR CH 1/10W 100K	1	FOR VEP86267B
R90-95	ERJ6GEYG103	M.RESISTOR CH 1/10W 10K	6	
R96	ERJ6GEYF473	M.RESISTOR CH 1/10W 47K	1	
R97	ERJ6GEYG105	M.RESISTOR CH 1/10W 1M	1	
R100	ERJ6GEYG103	M.RESISTOR CH 1/10W 10K	1	
R101,02	ERJ6GEYF473	M.RESISTOR CH 1/10W 47K	2	
R103,04	ERJ6GEYF472	M.RESISTOR CH 1/10W 4.7K	2	
R105	ERJ6GEYF473	M.RESISTOR CH 1/10W 47K	1	
R106	ERJ6GEYG105	M.RESISTOR CH 1/10W 1M	1	
R108	ERJ6GEYG103	M.RESISTOR CH 1/10W 10K	1	
R109,10	ERJ6GEYF473	M.RESISTOR CH 1/10W 47K	2	
R111,12	ERJ6GEYF472	M.RESISTOR CH 1/10W 4.7K	2	
R113	ERJ6GEYF473	M.RESISTOR CH 1/10W 47K	1	
R114	ERJ6GEYG105	M.RESISTOR CH 1/10W 1M	1	
R116	ERJ6GEYG103	M.RESISTOR CH 1/10W 10K	1	
R117,18	ERJ6GEYF473	M.RESISTOR CH 1/10W 47K	2	
R119,20	ERJ6GEYF472	M.RESISTOR CH 1/10W 4.7K	2	
R121	ERJ6GEYF473	M.RESISTOR CH 1/10W 47K	1	
R122	ERJ6GEYG105	M.RESISTOR CH 1/10W 1M	1	
R124	ERJ6GEYG103	M.RESISTOR CH 1/10W 10K	1	
R125,26	ERJ6GEYF473	M.RESISTOR CH 1/10W 47K	2	
R127,28	ERJ6GEYF472	M.RESISTOR CH 1/10W 4.7K	2	
R129-37	ERJ6GEYF473	M.RESISTOR CH 1/10W 47K	9	
R138,39	ERJ6GEYG103	M.RESISTOR CH 1/10W 10K	2	
R141,42	ERJ6GEYF473	M.RESISTOR CH 1/10W 47K	2	
R145-47	ERJ6GEYF473	M.RESISTOR CH 1/10W 47K	3	
R150	ERJ6GEYG562	M.RESISTOR CH 1/10W 5.6K	1	
R152	ERJ6GEYG222	M.RESISTOR CH 1/10W 2.2K	1	
R153	ERJ6GEYG271	M.RESISTOR CH 1/10W 270	1	
R154	ERX1SJ1R0	M.RESISTOR 1W 1.0	1	
R155	ERJ6GEY0R00	M.RESISTOR CH 1/10W 0	1	
R156	ERJ6GEYG562	M.RESISTOR CH 1/10W 5.6K	1	
R157	ERJ6GEYG222	M.RESISTOR CH 1/10W 2.2K	1	
R158	ERJ6GEYG271	M.RESISTOR CH 1/10W 270	1	
R159	ERG1SJ220	M.RESISTOR 1W 22	1	
R160	ERJ6GEYG103	M.RESISTOR CH 1/10W 10K	1	
R161	ERJ6GEYG222	M.RESISTOR CH 1/10W 2.2K	1	
R162,63	ERJ8GCYG151	M.RESISTOR CH 1/8W 150	2	
R164,65	ERJ6GEYG563	M.RESISTOR CH 1/10W 56K	2	
R166	ERJ8GCYG152	M.RESISTOR CH 1/8W 1.5K	1	
R167-69	ERJ8GCYG681	M.RESISTOR CH 1/8W 680	3	
R170	ERJ6GEYG103	M.RESISTOR CH 1/10W 10K	1	
R171	ERJ6GEYG563	M.RESISTOR CH 1/10W 56K	1	
R172,73	ERJ6GEYG394	M.RESISTOR CH 1/10W 390K	2	
R174-81	ERJ6GEYG103	M.RESISTOR CH 1/10W 10K	8	
R182	ERJ6GEYF333	M.RESISTOR CH 1/10W 33K	1	
R184	ERJ6GEYF472	M.RESISTOR CH 1/10W 4.7K	1	
R185	ERJ6GEYG103	M.RESISTOR CH 1/10W 10K	1	
R186	ERJ6GEYG332	M.RESISTOR CH 1/10W 3.3K	1	
R187-90	ERJ8GCYJ391	M.RESISTOR CH 1/8W 390	4	
R191	ERJ6GEYG332	M.RESISTOR CH 1/10W 3.3K	1	
R192	ERJ6GEYF472	M.RESISTOR CH 1/10W 4.7K	1	
R193,94	ERJ6GEYG103	M.RESISTOR CH 1/10W 10K	2	
R195	ERJ6GEYF472	M.RESISTOR CH 1/10W 4.7K	1	
R196,97	ERJ8GCYJ391	M.RESISTOR CH 1/8W 390	2	
R198	ERJ6GEYG332	M.RESISTOR CH 1/10W 3.3K	1	
R199,00	ERJ8GCYJ391	M.RESISTOR CH 1/8W 390	2	
R201	ERJ6GEYG332	M.RESISTOR CH 1/10W 3.3K	1	
R202	ERJ6GEYG103	M.RESISTOR CH 1/10W 10K	1	
R203,04	ERJ6GEYF472	M.RESISTOR CH 1/10W 4.7K	2	
R205	ERJ6GEYG103	M.RESISTOR CH 1/10W 10K	1	
R206	ERJ6GEYG332	M.RESISTOR CH 1/10W 3.3K	1	
R207,08	ERJ8GCYJ391	M.RESISTOR CH 1/8W 390	2	
R209	ERJ6GEYG332	M.RESISTOR CH 1/10W 3.3K	1	
R210,11	ERJ8GCYJ391	M.RESISTOR CH 1/8W 390	2	
R212	ERJ6GEYF472	M.RESISTOR CH 1/10W 4.7K	1	
R213,14	ERJ6GEYG103	M.RESISTOR CH 1/10W 10K	2	
R215	ERJ6GEYF472	M.RESISTOR CH 1/10W 4.7K	1	
R216,17	ERJ8GCYJ391	M.RESISTOR CH 1/8W 390	2	
R218	ERJ6GEYG332	M.RESISTOR CH 1/10W 3.3K	1	
R219,20	ERJ8GCYJ391	M.RESISTOR CH 1/8W 390	2	
R221	ERJ6GEYG332	M.RESISTOR CH 1/10W 3.3K	1	
R222	ERJ6GEYG103	M.RESISTOR CH 1/10W 10K	1	
R223,24	ERJ6GEYF472	M.RESISTOR CH 1/10W 4.7K	2	
R225	ERJ6GEYG103	M.RESISTOR CH 1/10W 10K	1	

Ref.No.	Part No.	Part Name & Description	Pcs	Remarks
R226	ERJ6GEYG392	M.RESISTOR CH 1/10W 3.9K	1	
R227,28	ERJ8GCYJ391	M.RESISTOR CH 1/8W 390	2	
R229	ERJ6GEYG392	M.RESISTOR CH 1/10W 3.9K	1	
R230,31	ERJ8GCYJ391	M.RESISTOR CH 1/8W 390	2	
R232	ERJ6GEYF472	M.RESISTOR CH 1/10W 4.7K	1	
R233,34	ERJ6GEYG103	M.RESISTOR CH 1/10W 10K	2	
R235	ERJ6GEYF472	M.RESISTOR CH 1/10W 4.7K	1	
R236,37	ERJ8GCYJ391	M.RESISTOR CH 1/8W 390	2	
R238	ERJ6GEYG392	M.RESISTOR CH 1/10W 3.9K	1	
R239,40	ERJ8GCYJ391	M.RESISTOR CH 1/8W 390	2	
R241	ERJ6GEYG392	M.RESISTOR CH 1/10W 3.9K	1	
R242	ERJ6GEYG103	M.RESISTOR CH 1/10W 10K	1	
R243,44	ERJ6GEYF472	M.RESISTOR CH 1/10W 4.7K	2	
R245	ERJ6GEYG103	M.RESISTOR CH 1/10W 10K	1	
R246	ERJ6GEYG332	M.RESISTOR CH 1/10W 3.3K	1	
R247,48	ERJ8GCYJ391	M.RESISTOR CH 1/8W 390	2	
R249	ERJ6GEYG332	M.RESISTOR CH 1/10W 3.3K	1	
R250,51	ERJ8GCYJ391	M.RESISTOR CH 1/8W 390	2	
R252	ERJ6GEYF472	M.RESISTOR CH 1/10W 4.7K	1	
R253,54	ERJ6GEYG103	M.RESISTOR CH 1/10W 10K	2	
R255	ERJ6GEYF472	M.RESISTOR CH 1/10W 4.7K	1	
R256,57	ERJ8GCYJ391	M.RESISTOR CH 1/8W 390	2	
R258	ERJ6GEYG332	M.RESISTOR CH 1/10W 3.3K	1	
R259,60	ERJ8GCYJ391	M.RESISTOR CH 1/8W 390	2	
R261	ERJ6GEYG332	M.RESISTOR CH 1/10W 3.3K	1	
R262	ERJ6GEYG103	M.RESISTOR CH 1/10W 10K	1	
R263	ERJ6GEYF472	M.RESISTOR CH 1/10W 4.7K	1	
R266-69	ERJ6GEY0R00	M.RESISTOR CH 1/10W 0	4	
R271	ERJ6GEYG222	M.RESISTOR CH 1/10W 2.2K	1	
R273	ERJ6GEYG222	M.RESISTOR CH 1/10W 2.2K	1	
R275	ERJ6GEYG222	M.RESISTOR CH 1/10W 2.2K	1	
R277	ERJ6GEYG222	M.RESISTOR CH 1/10W 2.2K	1	
R284,85	ERJ6GEY0R00	M.RESISTOR CH 1/10W 0	2	
R288	ERJ6GEYF472	M.RESISTOR CH 1/10W 4.7K	1	
R290	ERJ6GEYF472	M.RESISTOR CH 1/10W 4.7K	1	
R291	ERJ6GEYG105	M.RESISTOR CH 1/10W 1M	1	
R292,93	ERJ6GEYF473	M.RESISTOR CH 1/10W 47K	2	
R294	ERJ6GEYG103	M.RESISTOR CH 1/10W 10K	1	
R295	ERJ6GEYF472	M.RESISTOR CH 1/10W 4.7K	1	
R296	ERJ6GEYF473	M.RESISTOR CH 1/10W 47K	1	
R297	ERJ6GEYF472	M.RESISTOR CH 1/10W 4.7K	1	
R298	ERJ6GEYG105	M.RESISTOR CH 1/10W 1M	1	
R299	ERJ6GEYF473	M.RESISTOR CH 1/10W 47K	1	
R304-15	ERJ8GCYJ391	M.RESISTOR CH 1/8W 390	12	
R316,17	ERG1SJ100	M.RESISTOR 1W 10	2	
R318	ERX1SJ6R2	M.RESISTOR 1W 6.2	1	
R319	ERG1SJ100	M.RESISTOR 1W 10	1	
R320	ERJ6GEYG222	M.RESISTOR CH 1/10W 2.2K	1	
R321-28	ERJ6GEYG470	M.RESISTOR CH 1/10W 47	8	
R329,30	ERJ6GEYG103	M.RESISTOR CH 1/10W 10K	2	
R332	ERJ6GEYG222	M.RESISTOR CH 1/10W 2.2K	1	
R333	ERJ6GEY0R00	M.RESISTOR CH 1/10W 0	1	
R334	ERJ6GEYG103	M.RESISTOR CH 1/10W 10K	1	
R337-39	ERJ8GCYG681	M.RESISTOR CH 1/8W 680	3	
R341	ERJ6GEYG105	M.RESISTOR CH 1/10W 1M	1	
R342	ERJ6GEYF473	M.RESISTOR CH 1/10W 47K	1	
R345	ERJ6GEYG105	M.RESISTOR CH 1/10W 1M	1	
R346	ERJ6GEYF473	M.RESISTOR CH 1/10W 47K	1	
R347	ERJ6GEYG104	M.RESISTOR CH 1/10W 100K	1	
R348	ERJ6GEYG103	M.RESISTOR CH 1/10W 10K	1	
R349-62	ERJ6GEYG470	M.RESISTOR CH 1/10W 47	14	
R363	ERJ6GEYF123	M.RESISTOR CH 1/10W 12K	1	
R364	ERJ6GEYG224	M.RESISTOR CH 1/10W 220K	1	
R365	ERJ6GEYG223	M.RESISTOR CH 1/10W 22K	1	
R366	ERJ6GEYG563	M.RESISTOR CH 1/10W 56K	1	
R367	ERJ6GEY0R00	M.RESISTOR CH 1/10W 0	1	
R368-70	ERJ6GEYG101	M.RESISTOR CH 1/10W 100	3	
R371	ERJ6GEYG103	M.RESISTOR CH 1/10W 10K	1	
R372	ERJ6GEY0R00	M.RESISTOR CH 1/10W 0	1	
R375,76	ERJ6GEY0R00	M.RESISTOR CH 1/10W 0	2	
R377-79	ERJ6GEYG563	M.RESISTOR CH 1/10W 56K	3	
R380	ERJ8GCYG152	M.RESISTOR CH 1/8W 1.5K	1	
R382,83	ERJ6GEY0R00	M.RESISTOR CH 1/10W 0	2	
R384	ERJ6GEYF473	M.RESISTOR CH 1/10W 47K	1	
R500	ERJ6GEYF473	M.RESISTOR CH 1/10W 47K	1	

Ref.No.	Part No.	Part Name & Description	Pcs	Remarks
R501	ERJ6GEYG103	M.RESISTOR CH 1/10W 10K	1	
R502,03	ERJ6GEYF473	M.RESISTOR CH 1/10W 47K	2	
R504-11	ERJ6GEYG103	M.RESISTOR CH 1/10W 10K	8	
R512	ERJ6GEYF473	M.RESISTOR CH 1/10W 47K	1	
R513-15	ERJ6GEYG103	M.RESISTOR CH 1/10W 10K	3	
R516,17	ERJ6GEYF473	M.RESISTOR CH 1/10W 47K	2	
R518,19	ERJ6GEYF472	M.RESISTOR CH 1/10W 4.7K	2	
R520	ERJ6GEYG101	M.RESISTOR CH 1/10W 100	1	
R521	ERJ6GEYF473	M.RESISTOR CH 1/10W 47K	1	
R523,24	ERJ6GEYF472	M.RESISTOR CH 1/10W 4.7K	2	
R525	ERJ6GEYF473	M.RESISTOR CH 1/10W 47K	1	
R527	ERJ6GEYG101	M.RESISTOR CH 1/10W 100	1	
R528-31	ERJ6GEYF473	M.RESISTOR CH 1/10W 47K	4	
R532,33	ERJ6GEYF472	M.RESISTOR CH 1/10W 4.7K	2	
R534	ERJ6GEYG101	M.RESISTOR CH 1/10W 100	1	
R535,36	ERJ6GEYF472	M.RESISTOR CH 1/10W 4.7K	2	
R537	ERJ6GEYG101	M.RESISTOR CH 1/10W 100	1	
R542	ERJ6GEYG223	M.RESISTOR CH 1/10W 22K	1	
R543	ERJ6GEYG101	M.RESISTOR CH 1/10W 100	1	
R544	ERJ6GEYG394	M.RESISTOR CH 1/10W 390K	1	
R545	ERJ6GEYG103	M.RESISTOR CH 1/10W 10K	1	
R546	ERJ6GEYG223	M.RESISTOR CH 1/10W 22K	1	
R547-49	ERJ6GEYF473	M.RESISTOR CH 1/10W 47K	3	
R550,51	ERJ6GEYG103	M.RESISTOR CH 1/10W 10K	2	
R554-58	ERJ6GEYG103	M.RESISTOR CH 1/10W 10K	5	
R580	ERJ6GEYF473	M.RESISTOR CH 1/10W 47K	1	
R585	ERJ6GEY0R00	M.RESISTOR CH 1/10W 0	1	
R590-94	ERJ6GEYF473	M.RESISTOR CH 1/10W 47K	5	
R598	ERJ6GEYG101	M.RESISTOR CH 1/10W 100	1	
R599	ERJ6GEYG103	M.RESISTOR CH 1/10W 10K	1	
R606,07	ERJ6GEY0R00	M.RESISTOR CH 1/10W 0	2	
R608	ERJ6GEYG222	M.RESISTOR CH 1/10W 2.2K	1	
R609	ERJ6GEYF473	M.RESISTOR CH 1/10W 47K	1	
R610-13	ERJ6GEYG103	M.RESISTOR CH 1/10W 10K	4	
R629	ERJ6GEY0R00	M.RESISTOR CH 1/10W 0	1	
R634	ERJ6GEY0R00	M.RESISTOR CH 1/10W 0	1	
R636	ERJ6GEY0R00	M.RESISTOR CH 1/10W 0	1	
R638,39	ERJ6GEY0R00	M.RESISTOR CH 1/10W 0	2	
R641,42	ERJ6GEYF473	M.RESISTOR CH 1/10W 47K	2	
R643,44	ERJ6GEY0R00	M.RESISTOR CH 1/10W 0	2	
R646,47	ERJ6GEY0R00	M.RESISTOR CH 1/10W 0	2	
R648,49	ERJ6GEYG101	M.RESISTOR CH 1/10W 100	2	
R700	ERJ6GEY0R00	M.RESISTOR CH 1/10W 0	1	
R701	ERJ6GEYG103	M.RESISTOR CH 1/10W 10K	1	
R702	ERJ6GEYG222	M.RESISTOR CH 1/10W 2.2K	1	
R705-10	ERJ6GEYG394	M.RESISTOR CH 1/10W 390K	6	
R711-16	ERJ6GEYG102	M.RESISTOR CH 1/10W 1K	6	
R717	ERJ6GEYG103	M.RESISTOR CH 1/10W 10K	1	
R718	ERJ6GEYG101	M.RESISTOR CH 1/10W 100	1	
R719,20	ERJ6GEYG102	M.RESISTOR CH 1/10W 1K	2	
R721,22	ERJ6GEY0R00	M.RESISTOR CH 1/10W 0	2	
R723-26	ERJ6GEYG102	M.RESISTOR CH 1/10W 1K	4	
R727	ERJ6GEYG105	M.RESISTOR CH 1/10W 1M	1	
R728-31	ERJ6GEYF473	M.RESISTOR CH 1/10W 47K	4	
R732-34	ERJ6GEYG102	M.RESISTOR CH 1/10W 1K	3	
R735	ERJ6GEYG103	M.RESISTOR CH 1/10W 10K	1	
R736	ERJ6GEYG104	M.RESISTOR CH 1/10W 100K	1	
R737	ERJ6GEYG105	M.RESISTOR CH 1/10W 1M	1	
R738	ERJ6GEYG221	M.RESISTOR CH 1/10W 220	1	
R739,40	ERJ6GEYG103	M.RESISTOR CH 1/10W 10K	2	
R741,42	ERJ6GEYG104	M.RESISTOR CH 1/10W 100K	2	
R743,44	ERJ6GEYG101	M.RESISTOR CH 1/10W 100	2	
R745,46	ERJ6GEYG102	M.RESISTOR CH 1/10W 1K	2	
R747	ERJ6GEYG562	M.RESISTOR CH 1/10W 5.6K	1	
R748	ERJ6GEYG102	M.RESISTOR CH 1/10W 1K	1	
R749,50	ERJ6GEYG103	M.RESISTOR CH 1/10W 10K	2	
R751	ERJ6GEYG102	M.RESISTOR CH 1/10W 1K	1	
R752,53	ERJ6GEYG103	M.RESISTOR CH 1/10W 10K	2	
R754	ERJ6GEY0R00	M.RESISTOR CH 1/10W 0	1	
R755	ERJ6GEYG103	M.RESISTOR CH 1/10W 10K	1	
R756-59	ERJ6GEYG104	M.RESISTOR CH 1/10W 100K	4	
R760	ERJ6GEY0R00	M.RESISTOR CH 1/10W 0	1	FOR VEP86267A
R762	ERJ6GEY0R00	M.RESISTOR CH 1/10W 0	1	
R764,65	ERJ6GEY0R00	M.RESISTOR CH 1/10W 0	2	
R766	ERJ6GEYG105	M.RESISTOR CH 1/10W 1M	1	

Ref.No.	Part No.	Part Name & Description	Pcs	Remarks
R767-69	ERJ6GEYG103	M.RESISTOR CH 1/10W 10K	3	
R770	ERJ6GEYF473	M.RESISTOR CH 1/10W 47K	1	
R771	ERJ6GEYG101	M.RESISTOR CH 1/10W 100	1	
R772	ERJ6GEYG103	M.RESISTOR CH 1/10W 10K	1	
R773	ERJ6GEYG562	M.RESISTOR CH 1/10W 5.6K	1	
R774	ERJ6GEYG220	M.RESISTOR CH 1/10W 22	1	
R775,76	ERJ6GEYG332	M.RESISTOR CH 1/10W 3.3K	2	
R777	ERJ6GEYG222	M.RESISTOR CH 1/10W 2.2K	1	
R778-81	ERJ6RBD332	M.RESISTOR CH 1/10W 3.3K	4	
R782	ERJ6RED470	M.RESISTOR CH 1/10W 47	1	
R783	ERJ6RBD562	M.RESISTOR CH 1/10W 5.6K	1	
R784	ERJ6GEYG103	M.RESISTOR CH 1/10W 10K	1	
R785	ERJ6RBD562	M.RESISTOR CH 1/10W 5.6K	1	
R786	ERJ6RED820	M.RESISTOR CH 1/10W 82	1	
R787	ERJ6RED470	M.RESISTOR CH 1/10W 47	1	
R788	ERJ6RBD562	M.RESISTOR CH 1/10W 5.6K	1	
R789	ERJ6RBD103	M.RESISTOR CH 1/10W 10K	1	
R790	ERJ6RBD123	M.RESISTOR CH 1/10W 12K	1	
R791	ERJ6RBD683	M.RESISTOR CH 1/10W 68K	1	
R792	ERJ6GEYG394	M.RESISTOR CH 1/10W 390K	1	
R793	ERJ6RBD333	M.RESISTOR CH 1/10W 33K	1	
R794,95	ERJ6GEYG223	M.RESISTOR CH 1/10W 22K	2	
R796	ERJ6GEYG104	M.RESISTOR CH 1/10W 100K	1	
R797,98	ERJ6RBD102	M.RESISTOR CH 1/10W 1K	2	
R799	ERJ6GEYG102	M.RESISTOR CH 1/10W 1K	1	
R800,01	ERJ6GEY0R00	M.RESISTOR CH 1/10W 0	2	
R802	ERJ6RBD103	M.RESISTOR CH 1/10W 10K	1	
R803,04	ERJ6RBD102	M.RESISTOR CH 1/10W 1K	2	
R805-08	ERJ6RBD222	M.RESISTOR CH 1/10W 2.2K	4	
R809	ERJ6GEYF473	M.RESISTOR CH 1/10W 47K	1	
R810	ERJ6GEYG104	M.RESISTOR CH 1/10W 100K	1	
R811,12	ERJ6GEYG103	M.RESISTOR CH 1/10W 10K	2	
R813	ERJ6GEYG824	M.RESISTOR CH 1/10W 820K	1	
R814	ERJ6GEYG102	M.RESISTOR CH 1/10W 1K	1	
R815	ERJ6GEYG471	M.RESISTOR CH 1/10W 470	1	
R816-39	ERJ6GEYG470	M.RESISTOR CH 1/10W 47	24	
R840-47	ERJ6GEYG103	M.RESISTOR CH 1/10W 10K	8	
R849	ERJ6GEY0R00	M.RESISTOR CH 1/10W 0	1	
R853-56	ERJ6GEY0R00	M.RESISTOR CH 1/10W 0	4	
R857	ERJ6GEYG103	M.RESISTOR CH 1/10W 10K	1	
R858,59	ERJ6GEY0R00	M.RESISTOR CH 1/10W 0	2	
R860-62	ERJ6GEYF473	M.RESISTOR CH 1/10W 47K	3	
R865	ERJ6RBD562	M.RESISTOR CH 1/10W 5.6K	1	
R866	ERJ6GEY0R00	M.RESISTOR CH 1/10W 0	1	
R867	ERJ6GEYG102	M.RESISTOR CH 1/10W 1K	1	
R868	ERJ6GEYG103	M.RESISTOR CH 1/10W 10K	1	
R869	ERJ6GEYG223	M.RESISTOR CH 1/10W 22K	1	
R870	ERJ6GEYG102	M.RESISTOR CH 1/10W 1K	1	
R871,72	ERJ6GEYG470	M.RESISTOR CH 1/10W 47	2	
R873	ERJ6GEYG102	M.RESISTOR CH 1/10W 1K	1	
R874,75	ERJ6GEYG470	M.RESISTOR CH 1/10W 47	2	
R876	ERJ6GEYG102	M.RESISTOR CH 1/10W 1K	1	
R877,78	ERJ6GEYG394	M.RESISTOR CH 1/10W 390K	2	
R879,80	ERJ6GEYG470	M.RESISTOR CH 1/10W 47	2	
R881	ERJ6GEYG102	M.RESISTOR CH 1/10W 1K	1	
R882,83	ERJ6GEYG394	M.RESISTOR CH 1/10W 390K	2	
R884	ERJ6GEYG103	M.RESISTOR CH 1/10W 10K	1	
R885	ERJ6GEYG223	M.RESISTOR CH 1/10W 22K	1	
R886	ERJ6GEYG102	M.RESISTOR CH 1/10W 1K	1	
R887,88	ERJ6GEYG394	M.RESISTOR CH 1/10W 390K	2	
R890	ERJ6GEYG470	M.RESISTOR CH 1/10W 47	1	
R891	ERJ6GEY0R00	M.RESISTOR CH 1/10W 0	1	
R893	ERJ6GEY0R00	M.RESISTOR CH 1/10W 0	1	
R894	ERJ6GEYG105	M.RESISTOR CH 1/10W 1M	1	
R896,97	ERJ6GEY0R00	M.RESISTOR CH 1/10W 0	2	
R899-04	ERJ6GEY0R00	M.RESISTOR CH 1/10W 0	6	
R906	ERJ6GEY0R00	M.RESISTOR CH 1/10W 0	1	
R908	ERJ6GEY0R00	M.RESISTOR CH 1/10W 0	1	
R912	ERJ6GEY0R00	M.RESISTOR CH 1/10W 0	1	
R914	ERJ6GEY0R00	M.RESISTOR CH 1/10W 0	1	
R916	ERJ6GEY0R00	M.RESISTOR CH 1/10W 0	1	
R918	ERJ6GEY0R00	M.RESISTOR CH 1/10W 0	1	
R920	ERJ6GEY0R00	M.RESISTOR CH 1/10W 0	1	
R922	ERJ6GEY0R00	M.RESISTOR CH 1/10W 0	1	
R924	ERJ6GEY0R00	M.RESISTOR CH 1/10W 0	1	

Ref.No.	Part No.	Part Name & Description	Pcs	Remarks
R951	ERJ6GEY0R00	M.RESISTOR CH 1/10W 0	1	
R955	ERJ6GEY0R00	M.RESISTOR CH 1/10W 0	1	
R957	ERJ6GEY0R00	M.RESISTOR CH 1/10W 0	1	
R958	ERJ6GEYG470	M.RESISTOR CH 1/10W 47	1	
R960	ERJ6GEY0R00	M.RESISTOR CH 1/10W 0	1	
R961-68	ERJ6GEYG103	M.RESISTOR CH 1/10W 10K	8	
R977	ERJ6GEY0R00	M.RESISTOR CH 1/10W 0	1	
R980-82	ERJ6GEY0R00	M.RESISTOR CH 1/10W 0	3	
R983	ERJ6GEYG105	M.RESISTOR CH 1/10W 1M	1	
R984	ERJ6GEY0R00	M.RESISTOR CH 1/10W 0	1	
R986,87	ERJ6GEY0R00	M.RESISTOR CH 1/10W 0	2	
R988	ERJ6GEYG105	M.RESISTOR CH 1/10W 1M	1	
R989	ERJ6GEY0R00	M.RESISTOR CH 1/10W 0	1	
R991,92	ERJ6GEY0R00	M.RESISTOR CH 1/10W 0	2	
R993	ERJ6GEYG105	M.RESISTOR CH 1/10W 1M	1	
R994	ERJ6GEY0R00	M.RESISTOR CH 1/10W 0	1	
R996,97	ERJ6GEY0R00	M.RESISTOR CH 1/10W 0	2	
R998	ERJ6GEYG105	M.RESISTOR CH 1/10W 1M	1	
R999	ERJ6GEY0R00	M.RESISTOR CH 1/10W 0	1	
R1001,02	ERJ6GEY0R00	M.RESISTOR CH 1/10W 0	2	
R1003	ERJ6GEYG105	M.RESISTOR CH 1/10W 1M	1	
R1005,06	ERJ6GEY0R00	M.RESISTOR CH 1/10W 0	2	
R1010,11	ERJ6GEY0R00	M.RESISTOR CH 1/10W 0	2	
R1013-17	ERJ6GEY0R00	M.RESISTOR CH 1/10W 0	5	
R1019-22	ERJ6GEY0R00	M.RESISTOR CH 1/10W 0	4	
SW501	VSS0367-08B	SWITCH	1	
TG1	EYF6CU	TEST POINT	1	
TG701	EYF6CU	TEST POINT	1	
TP8	EYF6CU	TEST POINT	1	
TP13,14	EYF6CU	TEST POINT	2	
VC1	VCV0049	TRIMMER	1	
X1	VSX0641	CRYSTAL OSCILLATOR	1	
X500	VSX0641	CRYSTAL OSCILLATOR	1	
X701	VSX0654	CRYSTAL OSCILLATOR	1	
X702	VSX1001	CRYSTAL OSCILLATOR	1	
X703	VSX0958	CRYSTAL OSCILLATOR	1	FOR VEP86267A
X703	VSX0957	CRYSTAL OSCILLATOR	1	FOR VEP86267B
		MISCELLANEOUS		
	VML2143	CARD PULLER	1	
	VML2144	CARD PULLER	1	
■E4	VEP83410C	F4 VIDEO OUT P.C.BOARD	1	(RTL)
C3001	ECEV1CV470Q	E.CAPACITOR CH 16V 47U	1	
C3002	ECUX1E104ZFV	C.CAPACITOR CH 25V 0.1U	1	
C3003	ECEV1CV470Q	E.CAPACITOR CH 16V 47U	1	
C3004	ECUX1E104ZFV	C.CAPACITOR CH 25V 0.1U	1	
C3010	ECUX1E104ZFV	C.CAPACITOR CH 25V 0.1U	1	
C3011,12	ECEV1EV100Q	E.CAPACITOR CH 25V 10U	2	
C3013	ECUX1E104ZFV	C.CAPACITOR CH 25V 0.1U	1	
C3014,15	ECEV1CV100Q	E.CAPACITOR CH 16V 10U	2	
C3016	ECUX1E104ZFV	C.CAPACITOR CH 25V 0.1U	1	
C3017,18	ECEV1CV100Q	E.CAPACITOR CH 16V 10U	2	
C3019	ECUX1E104ZFV	C.CAPACITOR CH 25V 0.1U	1	
C3020,21	ECEV1EV100Q	E.CAPACITOR CH 25V 10U	2	
C3022	ECUX1E104ZFV	C.CAPACITOR CH 25V 0.1U	1	
C3023	ECEV1CV100Q	E.CAPACITOR CH 16V 10U	1	
C3024,25	ECUX1E104ZFV	C.CAPACITOR CH 25V 0.1U	2	
C3026	ECEV1CV100Q	E.CAPACITOR CH 16V 10U	1	
C3027,28	ECUX1E104ZFV	C.CAPACITOR CH 25V 0.1U	2	
C3029	ECEV1CV470Q	E.CAPACITOR CH 16V 47U	1	
C3030,31	ECUX1E104ZFV	C.CAPACITOR CH 25V 0.1U	2	
C3032	ECEV1CV100Q	E.CAPACITOR CH 16V 10U	1	
C3033,34	ECUX1E104ZFV	C.CAPACITOR CH 25V 0.1U	2	
C3035	ECEV1CV100Q	E.CAPACITOR CH 16V 10U	1	
C3036,37	ECUX1E104ZFV	C.CAPACITOR CH 25V 0.1U	2	

Ref.No.	Part No.	Part Name & Description	Pcs	Remarks
C3038	ECEV1CV100Q	E.CAPACITOR CH 16V 10U	1	
C3039,40	ECUX1E104ZFV	C.CAPACITOR CH 25V 0.1U	2	
C3041	ECEV1CV100Q	E.CAPACITOR CH 16V 10U	1	
C3042	ECUX1E104ZFV	C.CAPACITOR CH 25V 0.1U	1	
C3050-57	ECUX1E104ZFV	C.CAPACITOR CH 25V 0.1U	8	
C3058	ECUX1H271JCV	C.CAPACITOR CH 50V 270P	1	
C3070-74	ECUX1E104ZFV	C.CAPACITOR CH 25V 0.1U	5	
C3075	ECUX1H820JCV	C.CAPACITOR CH 50V 82P	1	
C3076	ECEV1EV100Q	E.CAPACITOR CH 25V 10U	1	
C3077	ECUX1E104ZFV	C.CAPACITOR CH 25V 0.1U	1	
C3078	ECUX1H103KBV	C.CAPACITOR CH 50V 0.01U	1	
C3079,80	ECUX1E104ZFV	C.CAPACITOR CH 25V 0.1U	2	
C3081	ECUX1H103KBV	C.CAPACITOR CH 50V 0.01U	1	
C3082	ECEV1EN3R3Q	E.CAPACITOR CH 25V 3.3U	1	
C3083	ECUX1H102JCV	C.CAPACITOR CH 50V 1000P	1	
C3084	ECUX1H103KBV	C.CAPACITOR CH 50V 0.01U	1	
C3085,86	ECUX1H470JCV	C.CAPACITOR CH 50V 47P	2	
C3087	ECUX1H103KBV	C.CAPACITOR CH 50V 0.01U	1	
C3088,89	ECUX1E104ZFV	C.CAPACITOR CH 25V 0.1U	2	
C3091,92	ECUX1E104ZFV	C.CAPACITOR CH 25V 0.1U	2	
C3100-04	ECUX1E104ZFV	C.CAPACITOR CH 25V 0.1U	5	
C3105-07	ECUX1H102JCV	C.CAPACITOR CH 50V 1000P	3	
C3108	ECUX1H101JCV	C.CAPACITOR CH 50V 100P	1	
C3109	ECUX1H102JCV	C.CAPACITOR CH 50V 1000P	1	
C3110	ECUX1H101JCV	C.CAPACITOR CH 50V 100P	1	
C3111	ECUX1E104ZFV	C.CAPACITOR CH 25V 0.1U	1	
C3112,13	ECUX1H150JCV	C.CAPACITOR CH 50V 15P	2	
C3114	ECUX1E104ZFV	C.CAPACITOR CH 25V 0.1U	1	
C3117-19	ECUX1E104ZFV	C.CAPACITOR CH 25V 0.1U	3	
C3160-65	ECUX1E104ZFV	C.CAPACITOR CH 25V 0.1U	6	
C3166,67	ECUX1H470JCV	C.CAPACITOR CH 50V 47P	2	
C3168,69	ECUX1H820JCV	C.CAPACITOR CH 50V 82P	2	
C3170,71	ECUX1E104ZFV	C.CAPACITOR CH 25V 0.1U	2	
C3172,73	ECUX1H103KBV	C.CAPACITOR CH 50V 0.01U	2	
C3174	ECEV1HN010Q	E.CAPACITOR CH 50V 1U	1	
C3175,76	ECUX1E104ZFV	C.CAPACITOR CH 25V 0.1U	2	
C3177	ECUX1E104KBN	C.CAPACITOR CH 25V 0.1U	1	
C3178	ECUX1H103KBV	C.CAPACITOR CH 50V 0.01U	1	
C3179-82	ECUX1E104KBN	C.CAPACITOR CH 25V 0.1U	4	
C3183,84	ECUX1E104ZFV	C.CAPACITOR CH 25V 0.1U	2	
C3200-03	ECUX1E104ZFV	C.CAPACITOR CH 25V 0.1U	4	
C3207	ECUX1H471JCV	C.CAPACITOR CH 50V 470P	1	
C3208	ECUX1H101JCV	C.CAPACITOR CH 50V 100P	1	
C3257	ECUX1E104ZFV	C.CAPACITOR CH 25V 0.1U	1	
C3260-65	ECUX1E104ZFV	C.CAPACITOR CH 25V 0.1U	6	
C3266,67	ECUX1H103KBV	C.CAPACITOR CH 50V 0.01U	2	
C3268	ECEV1HN010Q	E.CAPACITOR CH 50V 1U	1	
C3269	ECUX1H102JCV	C.CAPACITOR CH 50V 1000P	1	
C3270	ECUX1E104ZFV	C.CAPACITOR CH 25V 0.1U	1	
C3280-83	ECUX1E104ZFV	C.CAPACITOR CH 25V 0.1U	4	
C3284,85	ECUX1E104KBN	C.CAPACITOR CH 25V 0.1U	2	
C3286	ECUX1H103KBV	C.CAPACITOR CH 50V 0.01U	1	
C3287,88	ECUX1E104ZFV	C.CAPACITOR CH 25V 0.1U	2	
C3289	ECUX1E104KBN	C.CAPACITOR CH 25V 0.1U	1	
C3290	ECUX1H103KBV	C.CAPACITOR CH 50V 0.01U	1	
C3291	ECEV1HN010Q	E.CAPACITOR CH 50V 1U	1	
C3292	ECUX1E104ZFV	C.CAPACITOR CH 25V 0.1U	1	
C3300-04	ECUX1E104ZFV	C.CAPACITOR CH 25V 0.1U	5	
C3330,31	ECUX1E104ZFV	C.CAPACITOR CH 25V 0.1U	2	
C3340-43	ECUX1E104ZFV	C.CAPACITOR CH 25V 0.1U	4	
C3350-53	ECUX1E104ZFV	C.CAPACITOR CH 25V 0.1U	4	
C3370-83	ECUX1E104ZFV	C.CAPACITOR CH 25V 0.1U	14	
C3430	ECUX1E104ZFV	C.CAPACITOR CH 25V 0.1U	1	
C3432-40	ECUX1E104ZFV	C.CAPACITOR CH 25V 0.1U	9	
C3442,43	ECUX1E104ZFV	C.CAPACITOR CH 25V 0.1U	2	
C3445,46	ECUX1E104ZFV	C.CAPACITOR CH 25V 0.1U	2	
C3452	ECUX1H050CCV	C.CAPACITOR CH 50V 5P	1	
C3455	ECUX1H101JCV	C.CAPACITOR CH 50V 100P	1	
C3457	ECUX1H020CCV	C.CAPACITOR CH 50V 2P	1	
C3460	ECUX1E104ZFV	C.CAPACITOR CH 25V 0.1U	1	
C3464	ECEV1CV100Q	E.CAPACITOR CH 16V 10U	1	
C3465	ECUX1E104ZFV	C.CAPACITOR CH 25V 0.1U	1	
C3466	ECEV1CV100Q	E.CAPACITOR CH 16V 10U	1	
C3467,68	ECUX1E104ZFV	C.CAPACITOR CH 25V 0.1U	2	
C3469	ECEV1CV100Q	E.CAPACITOR CH 16V 10U	1	

Ref.No.	Part No.	Part Name & Description	Pcs	Remarks
C3470	ECUX1H470JCV	C.CAPACITOR CH 50V 47P	1	
C3471	ECUX1H020CCV	C.CAPACITOR CH 50V 2P	1	
C3472-74	ECUX1E104ZFV	C.CAPACITOR CH 25V 0.1U	3	
C3475	ECEV1CV100Q	E.CAPACITOR CH 16V 10U	1	
C3476-83	ECUX1E104ZFV	C.CAPACITOR CH 25V 0.1U	8	
C3484	ECEV1CV100Q	E.CAPACITOR CH 16V 10U	1	
C3485	ECUX1H102JCV	C.CAPACITOR CH 50V 1000P	1	
C3486	ECUX1H101JCV	C.CAPACITOR CH 50V 100P	1	
C3487	ECUX1E104ZFV	C.CAPACITOR CH 25V 0.1U	1	
C3500-11	ECUX1E104ZFV	C.CAPACITOR CH 25V 0.1U	12	
C3551-57	ECUX1E104ZFV	C.CAPACITOR CH 25V 0.1U	7	
C3576-79	ECUX1E104ZFV	C.CAPACITOR CH 25V 0.1U	4	
C3580,81	ECUM1E104ZFN	C.CAPACITOR CH 25V 0.1U	2	
C3582	ECEV0JV330Q	E.CAPACITOR CH6.3V 33U	1	
C3583-86	ECUX1E104ZFV	C.CAPACITOR CH 25V 0.1U	4	
C3588-92	ECUX1E104ZFV	C.CAPACITOR CH 25V 0.1U	5	
C3600	ECEV1EV330Q	E.CAPACITOR CH 25V 33U	1	
C3601	ECUX1E104ZFV	C.CAPACITOR CH 25V 0.1U	1	
C3602	ECEV1CV470Q	E.CAPACITOR CH 16V 47U	1	
C3603	ECUX1E104ZFV	C.CAPACITOR CH 25V 0.1U	1	
C3604	ECEV1CV470Q	E.CAPACITOR CH 16V 47U	1	
C3605	ECUX1E104ZFV	C.CAPACITOR CH 25V 0.1U	1	
C3606	ECEV1EV330Q	E.CAPACITOR CH 25V 33U	1	
C3607,08	ECUX1E104ZFV	C.CAPACITOR CH 25V 0.1U	2	
C3609	ECEV1CV100Q	E.CAPACITOR CH 16V 10U	1	
C3610,11	ECUX1E104ZFV	C.CAPACITOR CH 25V 0.1U	2	
C3612	ECEV1CV100Q	E.CAPACITOR CH 16V 10U	1	
C3613,14	ECUX1E104ZFV	C.CAPACITOR CH 25V 0.1U	2	
C3615	ECEV1CV100Q	E.CAPACITOR CH 16V 10U	1	
C3616,17	ECUX1E104ZFV	C.CAPACITOR CH 25V 0.1U	2	
C3618	ECEV1CV100Q	E.CAPACITOR CH 16V 10U	1	
C3619,20	ECUX1E104ZFV	C.CAPACITOR CH 25V 0.1U	2	
C3621	ECEV1CV100Q	E.CAPACITOR CH 16V 10U	1	
C3622,23	ECUX1E104ZFV	C.CAPACITOR CH 25V 0.1U	2	
C3624	ECEV1CV100Q	E.CAPACITOR CH 16V 10U	1	
C3625,26	ECUX1E104ZFV	C.CAPACITOR CH 25V 0.1U	2	
C3627	ECEV1CV100Q	E.CAPACITOR CH 16V 10U	1	
C3628	ECUX1E104ZFV	C.CAPACITOR CH 25V 0.1U	1	
C3650	ECEV1CV470Q	E.CAPACITOR CH 16V 47U	1	
C3651	ECUX1H330JCV	C.CAPACITOR CH 50V 33P	1	
C3652	ECUX1H220JCV	C.CAPACITOR CH 50V 22P	1	
C3653	ECUX1H680JCV	C.CAPACITOR CH 50V 68P	1	
C3654,55	ECUX1E104KBN	C.CAPACITOR CH 25V 0.1U	2	
C3656	ECEV1HN010Q	E.CAPACITOR CH 50V 1U	1	
C3657	ECUX1E104KBN	C.CAPACITOR CH 25V 0.1U	1	
C3658	ECUX1E104ZFV	C.CAPACITOR CH 25V 0.1U	1	
C3659	ECUX1H103KBV	C.CAPACITOR CH 50V 0.01U	1	
C3660	ECUX1H820JCV	C.CAPACITOR CH 50V 82P	1	
C3661,62	ECUX1H103KBV	C.CAPACITOR CH 50V 0.01U	2	
C3663	ECUX1H472KBV	C.CAPACITOR CH 50V 4700P	1	
C3664	ECUX1E104ZFV	C.CAPACITOR CH 25V 0.1U	1	
C3665	ECUX1H103KBV	C.CAPACITOR CH 50V 0.01U	1	
C3666	ECUX1E104ZFV	C.CAPACITOR CH 25V 0.1U	1	
C3700	ECUX1E104ZFV	C.CAPACITOR CH 25V 0.1U	1	
C3701	ECEV1CV100Q	E.CAPACITOR CH 16V 10U	1	
C3702	ECUX1E104ZFV	C.CAPACITOR CH 25V 0.1U	1	
C3703	ECEV1CV100Q	E.CAPACITOR CH 16V 10U	1	
C3704	ECUX1E104ZFV	C.CAPACITOR CH 25V 0.1U	1	
C3705	ECEV1CV100Q	E.CAPACITOR CH 16V 10U	1	
C3706,07	ECUX1E104KBN	C.CAPACITOR CH 25V 0.1U	2	
C3708-10	ECUX1E104ZFV	C.CAPACITOR CH 25V 0.1U	3	
C3711	ECEV1CV100Q	E.CAPACITOR CH 16V 10U	1	
C3712	ECUX1H560JCV	C.CAPACITOR CH 50V 56P	1	
C3713	ECUX1H020CCV	C.CAPACITOR CH 50V 2P	1	
C3714	ECUX1H121JCV	C.CAPACITOR CH 50V 120P	1	
C3717-20	ECUX1E104ZFV	C.CAPACITOR CH 25V 0.1U	4	
C3721	ECUX1H470JCV	C.CAPACITOR CH 50V 47P	1	
C3725	ECUX1H180JCV	C.CAPACITOR CH 50V 18P	1	
C3726	ECUX1H560JCV	C.CAPACITOR CH 50V 56P	1	
C3727,28	ECUX1E104ZFV	C.CAPACITOR CH 25V 0.1U	2	
C3729	ECUX1H100DCV	C.CAPACITOR CH 50V 10P	1	
C3730	ECUX1H820JCV	C.CAPACITOR CH 50V 82P	1	
C3731	ECEV1CV100Q	E.CAPACITOR CH 16V 10U	1	
C3732	ECUX1H151JCV	C.CAPACITOR CH 50V 150P	1	
C3733,34	ECUX1E104ZFV	C.CAPACITOR CH 25V 0.1U	2	

Ref.No.	Part No.	Part Name & Description	Pcs	Remarks
C3735,36	ECUX1H221JCV	C.CAPACITOR CH 50V 220P	2	
C3739,40	ECUX1E104ZFV	C.CAPACITOR CH 25V 0.1U	2	
C3745	ECUX1H180JCV	C.CAPACITOR CH 50V 18P	1	
C3746	ECUX1H560JCV	C.CAPACITOR CH 50V 56P	1	
C3747,48	ECUX1E104ZFV	C.CAPACITOR CH 25V 0.1U	2	
C3749	ECUX1H100DCV	C.CAPACITOR CH 50V 10P	1	
C3750	ECUX1H820JCV	C.CAPACITOR CH 50V 82P	1	
C3751	ECEV1CV100Q	E.CAPACITOR CH 16V 10U	1	
C3752,53	ECUX1E104ZFV	C.CAPACITOR CH 25V 0.1U	2	
C3754,55	ECUX1H221JCV	C.CAPACITOR CH 50V 220P	2	
C3756-58	ECUX1H102JCV	C.CAPACITOR CH 50V 1000P	3	
C3759	ECUX1H821JCV	C.CAPACITOR CH 50V 820P	1	
C3760	ECUX1E104ZFV	C.CAPACITOR CH 25V 0.1U	1	
C3761-64	ECEA1CGE221	E.CAPACITOR 16V 220U	4	
C3800	ECUX1E104ZFV	C.CAPACITOR CH 25V 0.1U	1	
C3801,02	ECEV1CV100Q	E.CAPACITOR CH 16V 10U	2	
C3803	ECUX1E104ZFV	C.CAPACITOR CH 25V 0.1U	1	
C3804	ECEV1CV100Q	E.CAPACITOR CH 16V 10U	1	
C3805	ECUX1E104ZFV	C.CAPACITOR CH 25V 0.1U	1	
C3810	ECUX1H391JCV	C.CAPACITOR CH 50V 390P	1	
C3811	ECUX1H151JCV	C.CAPACITOR CH 50V 150P	1	
C3812,13	ECUX1E104ZFV	C.CAPACITOR CH 25V 0.1U	2	
C3814,15	ECUX1E104KBN	C.CAPACITOR CH 25V 0.1U	2	
C3817	ECUX1H103KBV	C.CAPACITOR CH 50V 0.01U	1	
C3818,19	ECUX1E104ZFV	C.CAPACITOR CH 25V 0.1U	2	
C3820,21	ECEV1CV100Q	E.CAPACITOR CH 16V 10U	2	
C3824	ECUX1E104KBN	C.CAPACITOR CH 25V 0.1U	1	
C3825,26	ECUX1E104ZFV	C.CAPACITOR CH 25V 0.1U	2	
C3827,28	ECUX1H220JCV	C.CAPACITOR CH 50V 22P	2	
C3829	ECUX1E104ZFV	C.CAPACITOR CH 25V 0.1U	1	
C3830	ECUX1H820JCV	C.CAPACITOR CH 50V 82P	1	
C3831	ECUX1E104KBN	C.CAPACITOR CH 25V 0.1U	1	
C3832,33	ECUX1E104ZFV	C.CAPACITOR CH 25V 0.1U	2	
C3834	ECUX1H100DCV	C.CAPACITOR CH 50V 10P	1	
C3835,36	ECUX1E104KBN	C.CAPACITOR CH 25V 0.1U	2	
C3837	ECUX1H271JCV	C.CAPACITOR CH 50V 270P	1	
C3838	ECUX1H151JCV	C.CAPACITOR CH 50V 150P	1	
C3839	ECUX1E104KBN	C.CAPACITOR CH 25V 0.1U	1	
C3840	ECUX1H820JCV	C.CAPACITOR CH 50V 82P	1	
C3841-43	ECUX1E104ZFV	C.CAPACITOR CH 25V 0.1U	3	
C3844	ECUX1E104KBN	C.CAPACITOR CH 25V 0.1U	1	
C3845,46	ECUX1H220JCV	C.CAPACITOR CH 50V 22P	2	
C3847	ECUX1E104KBN	C.CAPACITOR CH 25V 0.1U	1	
C3848,49	ECUX1H220JCV	C.CAPACITOR CH 50V 22P	2	
C3850,51	ECUX1E104ZFV	C.CAPACITOR CH 25V 0.1U	2	
C3857-60	ECUX1E104ZFV	C.CAPACITOR CH 25V 0.1U	4	
C3861	ECUX1E473KBN	C.CAPACITOR CH 25V 0.047U	1	
C3862	ECEV1CV100Q	E.CAPACITOR CH 16V 10U	1	
C3864,65	ECUX1E104ZFV	C.CAPACITOR CH 25V 0.1U	2	
C3866	ECEV0JV470Q	E.CAPACITOR CH6.3V 47U	1	
C3867	ECUX1E104ZFV	C.CAPACITOR CH 25V 0.1U	1	
C3868	ECEV1CV100Q	E.CAPACITOR CH 16V 10U	1	
C3869	ECEV0JV470Q	E.CAPACITOR CH6.3V 47U	1	
C3870	ECUX1E473KBN	C.CAPACITOR CH 25V 0.047U	1	
C3871	ECUX1E104ZFV	C.CAPACITOR CH 25V 0.1U	1	
C3873	ECUX1E104ZFV	C.CAPACITOR CH 25V 0.1U	1	
C3875	ECEV1CV100Q	E.CAPACITOR CH 16V 10U	1	
C3876	ECUX1E473KBN	C.CAPACITOR CH 25V 0.047U	1	
C3877	ECUX1E104KBN	C.CAPACITOR CH 25V 0.1U	1	
C3878	ECUX1H330JCV	C.CAPACITOR CH 50V 33P	1	
C3879	ECUX1H271JCV	C.CAPACITOR CH 50V 270P	1	
C3880	ECUX1H220JCV	C.CAPACITOR CH 50V 22P	1	
C3881	ECUX1H680JCV	C.CAPACITOR CH 50V 68P	1	
C3882	ECUX1H070DCV	C.CAPACITOR CH 50V 7P	1	
C3883	ECUX1H121JCV	C.CAPACITOR CH 50V 120P	1	
C3885	ECUX1H100DCV	C.CAPACITOR CH 50V 10P	1	
C3890	ECUX1E104ZFV	C.CAPACITOR CH 25V 0.1U	1	
C3893-95	ECUX1E104ZFV	C.CAPACITOR CH 25V 0.1U	3	
C3900	ECEV1CV100Q	E.CAPACITOR CH 16V 10U	1	
C3901	ECUX1E104ZFV	C.CAPACITOR CH 25V 0.1U	1	
C3902	ECEV1CV100Q	E.CAPACITOR CH 16V 10U	1	
C3903	ECUX1E104ZFV	C.CAPACITOR CH 25V 0.1U	1	
C3904	ECUX1H020CCV	C.CAPACITOR CH 50V 2P	1	
C3905	ECUX1H221JCV	C.CAPACITOR CH 50V 220P	1	
C3906	ECUX1H560JCV	C.CAPACITOR CH 50V 56P	1	

Ref.No.	Part No.	Part Name & Description	Pcs	Remarks
C3907	ECUX1H101JCV	C.CAPACITOR CH 50V 100P	1	
C3910,11	ECUX1E104ZFV	C.CAPACITOR CH 25V 0.1U	2	
C3914	ECUX1E104ZFV	C.CAPACITOR CH 25V 0.1U	1	
C3915	ECUX1H390JCV	C.CAPACITOR CH 50V 39P	1	
C3918-20	ECUX1E104ZFV	C.CAPACITOR CH 25V 0.1U	3	
C3921,22	ECUX1E104KBN	C.CAPACITOR CH 25V 0.1U	2	
C3924	ECUX1H103KBV	C.CAPACITOR CH 50V 0.01U	1	
C3925,26	ECUX1E104ZFV	C.CAPACITOR CH 25V 0.1U	2	
C3927	ECUX1H470JCV	C.CAPACITOR CH 50V 47P	1	
C3928	ECUX1E104KBN	C.CAPACITOR CH 25V 0.1U	1	
C3929,30	ECUX1E104ZFV	C.CAPACITOR CH 25V 0.1U	2	
C3931	ECUX1H220JCV	C.CAPACITOR CH 50V 22P	1	
C3932	ECUX1H020CCV	C.CAPACITOR CH 50V 2P	1	
C3933,34	ECUX1E104ZFV	C.CAPACITOR CH 25V 0.1U	2	
C3935	ECUX1H150JCV	C.CAPACITOR CH 50V 15P	1	
C3936	ECUX1H220JCV	C.CAPACITOR CH 50V 22P	1	
C3937,38	ECUX1H470JCV	C.CAPACITOR CH 50V 47P	2	
C3939	ECUX1H220JCV	C.CAPACITOR CH 50V 22P	1	
C3940	ECEV1CV100Q	E.CAPACITOR CH 16V 10U	1	
C3941	ECUX1E104ZFV	C.CAPACITOR CH 25V 0.1U	1	
C3942	ECUX1H102JCV	C.CAPACITOR CH 50V 1000P	1	
C3943	ECUX1H821JCV	C.CAPACITOR CH 50V 820P	1	
C3944	ECUX1E104ZFV	C.CAPACITOR CH 25V 0.1U	1	
C3945	ECUX1H560JCV	C.CAPACITOR CH 50V 56P	1	
C3946	ECUX1H101JCV	C.CAPACITOR CH 50V 100P	1	
C3950	ECUX1E104ZFV	C.CAPACITOR CH 25V 0.1U	1	
C3951	ECUX1H470JCV	C.CAPACITOR CH 50V 47P	1	
C3952,53	ECUX1E104ZFV	C.CAPACITOR CH 25V 0.1U	2	
C3954	ECUX1H180JCV	C.CAPACITOR CH 50V 18P	1	
C3955	ECUX1H121JCV	C.CAPACITOR CH 50V 120P	1	
C3956	ECUX1H120JCV	C.CAPACITOR CH 50V 12P	1	
C3957,58	ECUX1E104ZFV	C.CAPACITOR CH 25V 0.1U	2	
C3959	ECUX1H330JCV	C.CAPACITOR CH 50V 33P	1	
C3960,61	ECUX1E104ZFV	C.CAPACITOR CH 25V 0.1U	2	
C3962	ECUX1H330JCV	C.CAPACITOR CH 50V 33P	1	
C3963-65	ECUX1E104ZFV	C.CAPACITOR CH 25V 0.1U	3	
C3966	ECUX1H820JCV	C.CAPACITOR CH 50V 82P	1	
C3990	ECUX1H470JCV	C.CAPACITOR CH 50V 47P	1	
C3991	ECUX1H220JCV	C.CAPACITOR CH 50V 22P	1	
C3992	ECUX1E104ZFV	C.CAPACITOR CH 25V 0.1U	1	
C3993	ECUX1H390JCV	C.CAPACITOR CH 50V 39P	1	
C3994,95	ECUX1E104ZFV	C.CAPACITOR CH 25V 0.1U	2	
C3996	ECUX1H070DCV	C.CAPACITOR CH 50V 7P	1	
C3997	ECUX1E104ZFV	C.CAPACITOR CH 25V 0.1U	1	
D3070	MA335	DIODE	1	
D3160	M1MA152K	DIODE	1	
D3260	M1MA152K	DIODE	1	
D3550-52	MA701A	DIODE	3	
D3650	MA152WK	DIODE	1	
D3651	MA717	DIODE	1	
D3800,01	MA335	DIODE	2	
D3810,11	M1MA152K	DIODE	2	
D3950	M1MA152K	DIODE	1	
D3960,61	M1MA152K	DIODE	2	
FL3010-13	VLF1016A223	FILTER	4	
FL3700	VLF1294	FILTER	1	
FL3701,02	VLF1295	FILTER	2	
FL3900	VLF1016A223	FILTER	1	
FL3901	VLF1462	FILTER	1	
IC3010	NJM78L09UA	IC	1	
IC3011	NJM78L05UA	IC	1	
IC3012	NJM79L05UA	IC	1	
IC3013	NJM78L09UA	IC	1	
IC3014	NJM78L05UA	IC	1	
IC3015	NJM79L05UA	IC	1	
IC3016	NJM79L09UA	IC	1	
IC3050	SLA7220F5A	IC	1	
IC3051	EPM7128STC15	IC	1	BLANK ROM
ID3051	VVVSI3141		1	SOFTWARE
IC3070	MC74HC125AF	IC	1	
IC3071	NE521D	IC	1	
IC3072	MC74HC4053F	IC	1	

Ref.No.	Part No.	Part Name & Description	Pcs	Remarks
IC3073	NJM084M	IC	1	
IC3074	MC74HC4053F	IC	1	
IC3100	UPD65650J203	IC	1	
IC3101-03	SN74LS221NS	IC	3	
IC3104,05	SN74LS04NS	IC	2	
IC3106	MC74HC00AF	IC	1	
IC3109	D485505G25	IC	1	
IC3111	MC74HC574AF	IC	1	
IC3112	UPD42280G3	IC	1	
IC3160	MC74HC74AF	IC	1	
IC3161	74F112SJ	IC	1	
IC3162	MC74HC86AF	IC	1	
IC3163	MC74HC02AF	IC	1	
IC3164	SN74LS123NS	IC	1	
IC3165	SN74LS221NS	IC	1	
IC3166	SN74LS05NS	IC	1	
IC3167-69	MC74HC574AF	IC	3	
IC3170	SN74AS244AN	IC	1	
IC3171	NJM084M	IC	1	
IC3172	DAC10GS	IC	1	
IC3200	UPD65650J203	IC	1	
IC3202	SN74LS221NS	IC	1	
IC3250	MC74HC125AF	IC	1	
IC3260	NJM082BM	IC	1	
IC3261	74F08SJ	IC	1	
IC3262	SN74AS74ANS	IC	1	
IC3263	74F574SJ	IC	1	
IC3264,65	SN74AS244AN	IC	2	
IC3280-82	MC74HC574AF	IC	3	
IC3283	DAC10GS	IC	1	
IC3284	NJM082BM	IC	1	
IC3300,01	THCT574AF	IC	2	
IC3302	T74HCT541AF	IC	1	
IC3303,04	THCT574AF	IC	2	
IC3330,31	SN74AS244AN	IC	2	
IC3340	EPM7128STC15	IC	1	BLANK ROM
ID3340	VVVSI3141		1	SOFTWARE
IC3350	MB87D132	IC	1	
IC3370	L7A1519	IC	1	
IC3371	EPM7128STC15	IC	1	BLANK ROM
ID3371	VVVSI3141		1	SOFTWARE
IC3372-74	D485505G25	IC	3	
IC3430	74ALS541SJ	IC	1	
IC3432-34	MC10H124M	IC	3	
IC3435	74ALS541SJ	IC	1	
IC3436	MC10H124M	IC	1	
IC3437,38	74F244SJ	IC	2	
IC3439,40	D485505G25	IC	2	
IC3500,01	SN74S1051NS	IC	2	
IC3502	74F541SJ	IC	1	
IC3503	74F245SJ	IC	1	
IC3504,05	74F541SJ	IC	2	
IC3506,07	UPD71055GB	IC	2	
IC3508,09	THCT574AF	IC	2	
IC3510,11	SN74S1051NS	IC	2	
IC3550,51	D485505G25	IC	2	
IC3552	CG46183-104	IC	1	
IC3581-84	D485505G25	IC	4	
IC3585,86	THCT574AF	IC	2	
IC3587	EPM7128STC15	IC	1	BLANK ROM
ID3587	VVVSI3141		1	SOFTWARE
IC3588,89	TLCX244FT	IC	2	
IC3591-93	TVHT244FT	IC	3	
IC3595	TVHT244FT	IC	1	
IC3596	XC62AP3002P	IC	1	
IC3600	AN78N09	IC	1	
IC3601	AN78N05	IC	1	
IC3602	AN79N09	IC	1	
IC3603	AN78N09	IC	1	
IC3604	NJM78L05UA	IC	1	
IC3605	NJM79L05UA	IC	1	
IC3606	AN79N09	IC	1	
IC3650	AN91A12S	IC	1	
IC3651	NE521D	IC	1	
IC3700	ADV7123KST50	IC	1	

Ref.No.	Part No.	Part Name & Description	Pcs	Remarks
IC3702-04	LT1228CS8	IC	3	
IC3801	DAC10GS	IC	1	
IC3802	NJM082BM	IC	1	
IC3804	MC74HC4053F	IC	1	
IC3805	M51272FP	IC	1	
IC3900	LT1228CS8	IC	1	
IC3901	NJM2534V	IC	1	
IC3902	DAC10GS	IC	1	
IC3903	NJM082BM	IC	1	
IC3904	AD828AR	IC	1	
IC3990	NJM2534V	IC	1	
IC3996	LT1228CS8	IC	1	
IC3997	CXD1175AM	IC	1	
IC3998	NJM78L05UA	IC	1	
L3001-07	VLP0133	COIL	7	
L3071	VLQ0163J221	COIL 220UH	1	
L3550	VLP0133	COIL	1	
L3650	VLQ0163J680	COIL 68UH	1	
L3651	VLQ0163J221	COIL 220UH	1	
L3700	VLQ0163J220	COIL 22UH	1	
L3701	VLQ0576	COIL	1	
L3703	VLQ0163J220	COIL 22UH	1	
L3704	VLQ0163J100	COIL 10UH	1	
L3707	VLQ0163J6R8	COIL 6.8UH	1	
L3708	VLQ0163J2R7	COIL 2.7UH	1	
L3711	VLQ0163J6R8	COIL 6.8UH	1	
L3712	VLQ0163J2R7	COIL 2.7UH	1	
L3800-02	VLQ0163J220	COIL 22UH	3	
L3803	VLQ0163J181	COIL 180UH	1	
L3804	VLQ0163J560	COIL 56UH	1	
L3805-07	VLQ0163J470	COIL 47UH	3	
L3808	VLQ0163J270	COIL 27UH	1	
L3809	VLQ0163J6R8	COIL 6.8UH	1	
L3810	VLQ0163J5R6	COIL 5.6UH	1	
L3900	VLQ0163J100	COIL 10UH	1	
L3901,02	VLQ0163J220	COIL 22UH	2	
L3950	VLQ0163J470	COIL 47UH	1	
L3951,52	VLQ0163J560	COIL 56UH	2	
L3990	VLQ0163J180	COIL 18UH	1	
L3992	VLQ0163J390	COIL 39UH	1	
L3995	VLQ0163J150	COIL 15UH	1	
L3997	VLQ0319K101	COIL 100UH	1	
P3001,02	VJP3454B096	CONNECTOR (MALE)	2	
P3370	VJP1233T	CONNECTOR (MALE) 6P	1	
Q3070	MSB709-R	TRANSISTOR	1	
Q3071,72	2SK608-R	TRANSISTOR	2	
Q3700	MSD601-R	TRANSISTOR	1	
Q3701	MSB709-R	TRANSISTOR	1	
Q3702,03	MSD601-R	TRANSISTOR	2	
Q3704	MSB709-R	TRANSISTOR	1	
Q3707-09	MSB709-R	TRANSISTOR	3	
Q3710,11	MSD601-R	TRANSISTOR	2	
Q3712	MSB709-R	TRANSISTOR	1	
Q3715,16	MSB709-R	TRANSISTOR	2	
Q3717	MSD601-R	TRANSISTOR	1	
Q3718,19	2SB709A-R	TRANSISTOR	2	
Q3720	MSD602-R	TRANSISTOR	1	
Q3721	MSD601-R	TRANSISTOR	1	
Q3722	MSB709-R	TRANSISTOR	1	
Q3723	MSD601-R	TRANSISTOR	1	
Q3724	2SA1532-C	TRANSISTOR	1	
Q3800	MSB709-R	TRANSISTOR	1	
Q3801	MSC2295-B	TRANSISTOR	1	
Q3802	MSB709-R	TRANSISTOR	1	
Q3803	MSC2295-B	TRANSISTOR	1	
Q3804,05	MSB709-R	TRANSISTOR	2	
Q3806	MSC2295-B	TRANSISTOR	1	
Q3807	MSB709-R	TRANSISTOR	1	
Q3808,09	MSD601-R	TRANSISTOR	2	
Q3814	MSD601-R	TRANSISTOR	1	
Q3900,01	MSD601-R	TRANSISTOR	2	
Q3902	MSB709-R	TRANSISTOR	1	

Ref.No.	Part No.	Part Name & Description	Pcs	Remarks
Q3903	2SB709A-R	TRANSISTOR	1	
Q3904,05	2SA1532-C	TRANSISTOR	2	
Q3906,07	MSB709-R	TRANSISTOR	2	
Q3908	2SA1532-C	TRANSISTOR	1	
Q3950	2SC2404-D	TRANSISTOR	1	
Q3951,52	MSB709-R	TRANSISTOR	2	
Q3953	MSD601-R	TRANSISTOR	1	
Q3954-56	MSB709-R	TRANSISTOR	3	
Q3957-60	MSD601-R	TRANSISTOR	4	
Q3990	2SA1532-C	TRANSISTOR	1	
Q3991	2SB709A-R	TRANSISTOR	1	
Q3995	2SB709A-R	TRANSISTOR	1	
Q3996	2SA1532-C	TRANSISTOR	1	
Q3997	2SB709A-R	TRANSISTOR	1	
QR3800,01	MUN2213	TRANSISTOR-RESISTOR	2	
QR3900,01	MUN2213	TRANSISTOR-RESISTOR	2	
QR3902	MUN2112	TRANSISTOR-RESISTOR	1	
R3011	ERJ3GEYG102	M.RESISTOR CH 1/16W 1K	1	
R3017	ERJ3GEYJ681	M.RESISTOR CH 1/16W 680	1	
R3018	ERJ3GEYJ391	M.RESISTOR CH 1/16W 390	1	
R3019	ERJ3GEY0R00	M.RESISTOR CH 1/16W 0	1	
R3022	ERJ3GEYJ470	M.RESISTOR CH 1/16W 47	1	
R3023	ERJ3GEYG102	M.RESISTOR CH 1/16W 1K	1	
R3024	ERJ3GEY0R00	M.RESISTOR CH 1/16W 0	1	
R3025	ERJ3GEYJ271	M.RESISTOR CH 1/16W 270	1	
R3026	ERJ3GEYG102	M.RESISTOR CH 1/16W 1K	1	
R3027	ERJ3GEYJ124	M.RESISTOR CH 1/16W 120K	1	
R3029	ERJ3GEYJ392	M.RESISTOR CH 1/16W 3.9K	1	
R3032	ERJ3GEYG472	M.RESISTOR CH 1/16W 4.7K	1	
R3033	ERJ3GEYJ470	M.RESISTOR CH 1/16W 47	1	
R3034	ERJ3GEY0R00	M.RESISTOR CH 1/16W 0	1	
R3035	ERJ3GEYJ221	M.RESISTOR CH 1/16W 220	1	
R3036	ERJ3GEYJ222	M.RESISTOR CH 1/16W 2.2K	1	
R3037	ERJ3GEYJ103	M.RESISTOR CH 1/16W 10K	1	
R3038,39	ERJ3GEYG332	M.RESISTOR CH 1/16W 3.3K	2	
R3040	ERJ3GEY0R00	M.RESISTOR CH 1/16W 0	1	
R3043	ERJ3GEYJ222	M.RESISTOR CH 1/16W 2.2K	1	
R3044,45	ERJ3GEYG102	M.RESISTOR CH 1/16W 1K	2	
R3046	ERJ3GEY0R00	M.RESISTOR CH 1/16W 0	1	
R3050-53	ERJ3GEYG102	M.RESISTOR CH 1/16W 1K	4	
R3054-57	ERJ3GEYJ101	M.RESISTOR CH 1/16W 100	4	
R3059	ERJ3GEYJ101	M.RESISTOR CH 1/16W 100	1	
R3061,62	ERJ3GEYJ101	M.RESISTOR CH 1/16W 100	2	
R3064	ERJ3GEYJ101	M.RESISTOR CH 1/16W 100	1	
R3065-67	ERJ3GEYG102	M.RESISTOR CH 1/16W 1K	3	
R3068	ERJ3GEYG471	M.RESISTOR CH 1/16W 470	1	
R3070	ERJ3GEYJ153	M.RESISTOR CH 1/16W 15K	1	
R3071	ERJ3GEYJ333	M.RESISTOR CH 1/16W 33K	1	
R3072	ERJ3GEYG102	M.RESISTOR CH 1/16W 1K	1	
R3073	ERJ3GEYJ103	M.RESISTOR CH 1/16W 10K	1	
R3074	ERJ3GEYJ222	M.RESISTOR CH 1/16W 2.2K	1	
R3075	ERJ3GEYG152	M.RESISTOR CH 1/16W 1.5K	1	
R3076	ERJ3GEYJ821	M.RESISTOR CH 1/16W 820	1	
R3077	ERJ3GEYJ223	M.RESISTOR CH 1/16W 22K	1	
R3078	ERJ3GEYJ333	M.RESISTOR CH 1/16W 33K	1	
R3079	ERJ3GEYJ105	M.RESISTOR CH 1/16W 1M	1	
R3080	ERJ3GEYJ823	M.RESISTOR CH 1/16W 82K	1	
R3081,82	ERJ3GEYG102	M.RESISTOR CH 1/16W 1K	2	
R3083	ERJ3GEYJ563	M.RESISTOR CH 1/16W 56K	1	
R3084	ERJ3GEYJ183	M.RESISTOR CH 1/16W 18K	1	
R3085	ERJ3GEYJ333	M.RESISTOR CH 1/16W 33K	1	
R3086,87	ERJ3GEYJ563	M.RESISTOR CH 1/16W 56K	2	
R3088,89	ERJ3GEYG332	M.RESISTOR CH 1/16W 3.3K	2	
R3090	ERJ3GEYG102	M.RESISTOR CH 1/16W 1K	1	
R3091	ERJ3GEYJ101	M.RESISTOR CH 1/16W 100	1	
R3092,93	ERJ3GEYG102	M.RESISTOR CH 1/16W 1K	2	
R3094	ERJ3GEYJ333	M.RESISTOR CH 1/16W 33K	1	
R3100-08	ERJ3GEYG102	M.RESISTOR CH 1/16W 1K	9	
R3112	ERJ3GEY0R00	M.RESISTOR CH 1/16W 0	1	
R3113-23	ERJ3GEYG102	M.RESISTOR CH 1/16W 1K	11	
R3125,26	ERJ3GEYG102	M.RESISTOR CH 1/16W 1K	2	
R3127	ERJ3GEYJ563	M.RESISTOR CH 1/16W 56K	1	
R3128	ERJ3GEYG102	M.RESISTOR CH 1/16W 1K	1	

Ref.No.	Part No.	Part Name & Description	Pcs	Remarks
R3129,30	ERJ3GEYJ222	M.RESISTOR CH 1/16W 2.2K	2	
R3131	ERJ3GEYG822	M.RESISTOR CH 1/16W 8.2K	1	
R3132	ERJ3GEYJ153	M.RESISTOR CH 1/16W 15K	1	
R3133,34	ERJ6RBD331	M.RESISTOR CH 1/10W 330	2	
R3137	ERJ3GEYG102	M.RESISTOR CH 1/16W 1K	1	
R3139	ERJ3GEYG102	M.RESISTOR CH 1/16W 1K	1	
R3140	ERJ3GEY0R00	M.RESISTOR CH 1/16W 0	1	
R3142	ERJ3GEYG102	M.RESISTOR CH 1/16W 1K	1	
R3143,44	ERJ3GEYJ272	M.RESISTOR CH 1/16W 2.7K	2	
R3158	ERJ3GEYG102	M.RESISTOR CH 1/16W 1K	1	
R3160,61	ERJ3GEYG102	M.RESISTOR CH 1/16W 1K	2	
R3162	ERJ3GEYJ101	M.RESISTOR CH 1/16W 100	1	
R3163	ERJ3GEYG102	M.RESISTOR CH 1/16W 1K	1	
R3164,65	ERJ6RBD822	M.RESISTOR CH 1/10W 8.2K	2	
R3166	ERJ6RBD222	M.RESISTOR CH 1/10W 2.2K	1	
R3167	ERJ6RBD512	M.RESISTOR CH 1/10W 5.1K	1	
R3168	ERJ3GEYJ101	M.RESISTOR CH 1/16W 100	1	
R3169	ERJ3GEYG152	M.RESISTOR CH 1/16W 1.5K	1	
R3170	ERJ3GEYJ823	M.RESISTOR CH 1/16W 82K	1	
R3171,72	ERJ3GEYJ333	M.RESISTOR CH 1/16W 33K	2	
R3173	ERJ3GEYJ103	M.RESISTOR CH 1/16W 10K	1	
R3174	ERJ3GEYJ105	M.RESISTOR CH 1/16W 1M	1	
R3175	ERJ3GEYJ391	M.RESISTOR CH 1/16W 390	1	
R3176	ERJ3GEYJ103	M.RESISTOR CH 1/16W 10K	1	
R3177,78	ERJ3GEYG472	M.RESISTOR CH 1/16W 4.7K	2	
R3179	ERJ3GEYJ333	M.RESISTOR CH 1/16W 33K	1	
R3180	ERJ3GEYJ681	M.RESISTOR CH 1/16W 680	1	
R3181	ERJ3GEYJ821	M.RESISTOR CH 1/16W 820	1	
R3182	ERJ3GEYJ183	M.RESISTOR CH 1/16W 18K	1	
R3183	ERJ3GEYJ101	M.RESISTOR CH 1/16W 100	1	
R3184,85	ERJ3GEYJ272	M.RESISTOR CH 1/16W 2.7K	2	
R3200	ERJ3GEY0R00	M.RESISTOR CH 1/16W 0	1	
R3202	ERJ3GEY0R00	M.RESISTOR CH 1/16W 0	1	
R3208-14	ERJ3GEYG102	M.RESISTOR CH 1/16W 1K	7	
R3216	ERJ3GEY0R00	M.RESISTOR CH 1/16W 0	1	
R3217-28	ERJ3GEYG102	M.RESISTOR CH 1/16W 1K	12	
R3230,31	ERJ3GEYJ272	M.RESISTOR CH 1/16W 2.7K	2	
R3232-34	ERJ3GEYG102	M.RESISTOR CH 1/16W 1K	3	
R3235	ERJ3GEYJ101	M.RESISTOR CH 1/16W 100	1	
R3237	ERJ3GEYG102	M.RESISTOR CH 1/16W 1K	1	
R3238	ERJ3GEYJ181	M.RESISTOR CH 1/16W 180	1	
R3240	ERJ3GEYG472	M.RESISTOR CH 1/16W 4.7K	1	
R3241	ERJ3GEYJ181	M.RESISTOR CH 1/16W 180	1	
R3242	ERJ6RBD822	M.RESISTOR CH 1/10W 8.2K	1	
R3243	ERJ3GEYG102	M.RESISTOR CH 1/16W 1K	1	
R3244	ERJ3GEYG471	M.RESISTOR CH 1/16W 470	1	
R3246	ERJ3GEYJ681	M.RESISTOR CH 1/16W 680	1	
R3248,49	ERJ3GEYJ272	M.RESISTOR CH 1/16W 2.7K	2	
R3257,58	ERJ3GEYG102	M.RESISTOR CH 1/16W 1K	2	
R3260	ERJ3GEYG471	M.RESISTOR CH 1/16W 470	1	
R3261	ERJ3GEYJ333	M.RESISTOR CH 1/16W 33K	1	
R3262-64	ERJ3GEYJ103	M.RESISTOR CH 1/16W 10K	3	
R3265	ERJ3GEYJ105	M.RESISTOR CH 1/16W 1M	1	
R3266	ERJ3GEYG102	M.RESISTOR CH 1/16W 1K	1	
R3267-69	ERJ3GEYJ101	M.RESISTOR CH 1/16W 100	3	
R3270	ERJ3GEYG102	M.RESISTOR CH 1/16W 1K	1	
R3271	ERJ3GEYJ101	M.RESISTOR CH 1/16W 100	1	
R3280,81	ERJ3GEYG102	M.RESISTOR CH 1/16W 1K	2	
R3282,83	ERJ3GEYG472	M.RESISTOR CH 1/16W 4.7K	2	
R3284	ERJ3GEYJ681	M.RESISTOR CH 1/16W 680	1	
R3285	ERJ3GEYG682	M.RESISTOR CH 1/16W 6.8K	1	
R3286	ERJ3GEYJ473	M.RESISTOR CH 1/16W 47K	1	
R3287,88	ERJ3GEYJ333	M.RESISTOR CH 1/16W 33K	2	
R3289	ERJ3GEYG102	M.RESISTOR CH 1/16W 1K	1	
R3291	ERJ3GEYG152	M.RESISTOR CH 1/16W 1.5K	1	
R3292	ERJ3GEYJ823	M.RESISTOR CH 1/16W 82K	1	
R3293	ERJ3GEYJ104	M.RESISTOR CH 1/16W 100K	1	
R3294	ERJ3GEYJ105	M.RESISTOR CH 1/16W 1M	1	
R3295	ERJ3GEYG102	M.RESISTOR CH 1/16W 1K	1	
R3296	ERJ3GEYJ272	M.RESISTOR CH 1/16W 2.7K	1	
R3300-13	ERJ3GEYJ103	M.RESISTOR CH 1/16W 10K	14	
R3315,16	ERJ3GEYJ103	M.RESISTOR CH 1/16W 10K	2	
R3317	ERJ3GEYG102	M.RESISTOR CH 1/16W 1K	1	
R3318-21	ERJ3GEYJ103	M.RESISTOR CH 1/16W 10K	4	
R3324	ERJ3GEYG102	M.RESISTOR CH 1/16W 1K	1	

Ref.No.	Part No.	Part Name & Description	Pcs	Remarks
R3325	ERJ3GEYJ101	M.RESISTOR CH 1/16W 100	1	
R3326	ERJ3GEYG102	M.RESISTOR CH 1/16W 1K	1	
R3327,28	ERJ3GEYJ101	M.RESISTOR CH 1/16W 100	2	
R3330	ERJ3GEYJ101	M.RESISTOR CH 1/16W 100	1	
R3332-34	ERJ3GEYJ101	M.RESISTOR CH 1/16W 100	3	
R3340,41	ERJ3GEYG102	M.RESISTOR CH 1/16W 1K	2	
R3342	ERJ3GEYJ101	M.RESISTOR CH 1/16W 100	1	
R3343	ERJ3GEY0R00	M.RESISTOR CH 1/16W 0	1	
R3344	ERJ3GEYJ222	M.RESISTOR CH 1/16W 2.2K	1	
R3345	ERJ3GEYJ101	M.RESISTOR CH 1/16W 100	1	
R3346	ERJ3GEYG102	M.RESISTOR CH 1/16W 1K	1	
R3351	ERJ3GEY0R00	M.RESISTOR CH 1/16W 0	1	
R3373	ERJ3GEYJ101	M.RESISTOR CH 1/16W 100	1	
R3374-86	ERJ3GEYG102	M.RESISTOR CH 1/16W 1K	13	
R3388-90	ERJ3GEYG102	M.RESISTOR CH 1/16W 1K	3	
R3391,92	ERJ3GEYJ101	M.RESISTOR CH 1/16W 100	2	
R3393,94	ERDS2TJ102	C.RESISTOR 1/4W 1K	2	
R3395-98	ERJ3GEYG102	M.RESISTOR CH 1/16W 1K	4	
R3400-07	ERJ3GEYJ103	M.RESISTOR CH 1/16W 10K	8	
R3409-16	ERJ3GEYJ103	M.RESISTOR CH 1/16W 10K	8	
R3421,22	ERJ3GEYJ103	M.RESISTOR CH 1/16W 10K	2	
R3428,29	ERJ3GEYJ681	M.RESISTOR CH 1/16W 680	2	
R3430	ERJ3GEYJ101	M.RESISTOR CH 1/16W 100	1	
R3432-39	ERJ3GEYJ560	M.RESISTOR CH 1/16W 56	8	
R3441	ERJ3GEY0R00	M.RESISTOR CH 1/16W 0	1	
R3442,43	ERJ3GEYJ560	M.RESISTOR CH 1/16W 56	2	
R3444-67	ERJ3GEYJ681	M.RESISTOR CH 1/16W 680	24	
R3468-91	ERJ3GEYJ330	M.RESISTOR CH 1/16W 33	24	
R3492	ERJ3GEYJ101	M.RESISTOR CH 1/16W 100	1	
R3493-97	ERJ3GEYJ560	M.RESISTOR CH 1/16W 56	5	
R3498,99	ERJ3GEYJ330	M.RESISTOR CH 1/16W 33	2	
R3500-02	ERJ3GEYJ101	M.RESISTOR CH 1/16W 100	3	
R3503	ERJ3GEY0R00	M.RESISTOR CH 1/16W 0	1	
R3506-08	ERJ3GEYG102	M.RESISTOR CH 1/16W 1K	3	
R3510-31	ERJ3GEYJ103	M.RESISTOR CH 1/16W 10K	22	
R3536-38	ERJ3GEY0R00	M.RESISTOR CH 1/16W 0	3	
R3541,42	ERJ3GEY0R00	M.RESISTOR CH 1/16W 0	2	
R3543,44	ERJ3GEYG102	M.RESISTOR CH 1/16W 1K	2	
R3550	ERJ3GEYG102	M.RESISTOR CH 1/16W 1K	1	
R3578-80	ERJ3GEYG102	M.RESISTOR CH 1/16W 1K	3	
R3581,82	ERJ3GEYJ101	M.RESISTOR CH 1/16W 100	2	
R3584-86	ERJ3GEYJ101	M.RESISTOR CH 1/16W 100	3	
R3588-90	ERJ3GEYJ101	M.RESISTOR CH 1/16W 100	3	
R3598	ERJ3GEY0R00	M.RESISTOR CH 1/16W 0	1	
R3650	ERJ3GEYG102	M.RESISTOR CH 1/16W 1K	1	
R3651-53	ERJ3GEYJ222	M.RESISTOR CH 1/16W 2.2K	3	
R3654	ERJ3GEYG332	M.RESISTOR CH 1/16W 3.3K	1	
R3655	ERJ3GEYJ221	M.RESISTOR CH 1/16W 220	1	
R3656,57	ERJ3GEYG822	M.RESISTOR CH 1/16W 8.2K	2	
R3658	ERJ3GEYJ103	M.RESISTOR CH 1/16W 10K	1	
R3659	ERJ3GEYJ684	M.RESISTOR CH 1/16W 680K	1	
R3660	ERJ3GEYJ104	M.RESISTOR CH 1/16W 100K	1	
R3661	ERJ3GEYJ221	M.RESISTOR CH 1/16W 220	1	
R3662	ERJ3GEYJ222	M.RESISTOR CH 1/16W 2.2K	1	
R3663	ERJ3GEYJ184	M.RESISTOR CH 1/16W 180K	1	
R3664	ERJ3GEYJ222	M.RESISTOR CH 1/16W 2.2K	1	
R3665	ERJ3GEYJ333	M.RESISTOR CH 1/16W 33K	1	
R3666	ERJ3GEYJ560	M.RESISTOR CH 1/16W 56	1	
R3667	ERJ3GEYJ222	M.RESISTOR CH 1/16W 2.2K	1	
R3668	ERJ3GEYJ101	M.RESISTOR CH 1/16W 100	1	
R3669	ERJ3GEYJ560	M.RESISTOR CH 1/16W 56	1	
R3700	ERJ6RBD561	M.RESISTOR CH 1/10W 560	1	
R3701,02	ERJ3GEYJ151	M.RESISTOR CH 1/16W 150	2	
R3703	ERJ3GEYJ222	M.RESISTOR CH 1/16W 2.2K	1	
R3704,05	ERJ3RBD331	M.RESISTOR CH 1/16W 330	2	
R3706	ERJ3GEYJ222	M.RESISTOR CH 1/16W 2.2K	1	
R3707	ERJ3GEYJ101	M.RESISTOR CH 1/16W 100	1	
R3709	ERJ3GEYJ151	M.RESISTOR CH 1/16W 150	1	
R3710	ERJ3GEYJ101	M.RESISTOR CH 1/16W 100	1	
R3711	ERJ3GEYG102	M.RESISTOR CH 1/16W 1K	1	
R3712	ERJ3GEYJ124	M.RESISTOR CH 1/16W 120K	1	
R3713	ERJ3RBD201	M.RESISTOR CH 1/16W 200	1	
R3715	ERJ3GEYG471	M.RESISTOR CH 1/16W 470	1	
R3716	ERJ3GEYJ222	M.RESISTOR CH 1/16W 2.2K	1	
R3717,18	ERJ3GEYJ151	M.RESISTOR CH 1/16W 150	2	

Ref.No.	Part No.	Part Name & Description	Pcs	Remarks
R3719	ERJ3GEYJ222	M.RESISTOR CH 1/16W 2.2K	1	
R3720,21	ERJ3RBD471	M.RESISTOR CH 1/16W 470	2	
R3722	ERJ3GEYJ222	M.RESISTOR CH 1/16W 2.2K	1	
R3723	ERJ3GEYJ101	M.RESISTOR CH 1/16W 100	1	
R3724	ERJ3GEYJ221	M.RESISTOR CH 1/16W 220	1	
R3725	ERJ3GEYJ101	M.RESISTOR CH 1/16W 100	1	
R3726	ERJ6GEYG102	M.RESISTOR CH 1/10W 1K	1	
R3727	ERJ3GEYJ681	M.RESISTOR CH 1/16W 680	1	
R3728	ERJ3GEYJ391	M.RESISTOR CH 1/16W 390	1	
R3729	ERJ3GEYJ222	M.RESISTOR CH 1/16W 2.2K	1	
R3730	ERJ3GEYJ681	M.RESISTOR CH 1/16W 680	1	
R3731	ERJ3GEYG102	M.RESISTOR CH 1/16W 1K	1	
R3732	ERJ3GEYJ821	M.RESISTOR CH 1/16W 820	1	
R3733	ERJ3GEYJ681	M.RESISTOR CH 1/16W 680	1	
R3734	ERJ3GEYG102	M.RESISTOR CH 1/16W 1K	1	
R3735	ERJ3GEYG471	M.RESISTOR CH 1/16W 470	1	
R3736	ERJ6GEYG102	M.RESISTOR CH 1/10W 1K	1	
R3737	ERJ3GEYJ181	M.RESISTOR CH 1/16W 180	1	
R3738	ERJ3GEYJ121	M.RESISTOR CH 1/16W 120	1	
R3739	ERJ3GEYJ820	M.RESISTOR CH 1/16W 82	1	
R3740	ERJ3GEYJ103	M.RESISTOR CH 1/16W 10K	1	
R3741	ERJ3GEYG102	M.RESISTOR CH 1/16W 1K	1	
R3744	ERJ3GEYJ470	M.RESISTOR CH 1/16W 47	1	
R3745,46	ERJ3GEYG102	M.RESISTOR CH 1/16W 1K	2	
R3747	ERJ3GEYJ222	M.RESISTOR CH 1/16W 2.2K	1	
R3748,49	ERJ3GEYJ151	M.RESISTOR CH 1/16W 150	2	
R3750	ERJ3GEYJ222	M.RESISTOR CH 1/16W 2.2K	1	
R3751,52	ERJ3RBD471	M.RESISTOR CH 1/16W 470	2	
R3753	ERJ3GEYJ222	M.RESISTOR CH 1/16W 2.2K	1	
R3754	ERJ3GEYJ101	M.RESISTOR CH 1/16W 100	1	
R3755	ERJ3GEYJ222	M.RESISTOR CH 1/16W 2.2K	1	
R3756	ERJ3GEYJ103	M.RESISTOR CH 1/16W 10K	1	
R3757,58	ERJ3GEYG332	M.RESISTOR CH 1/16W 3.3K	2	
R3761	ERJ3GEYJ681	M.RESISTOR CH 1/16W 680	1	
R3762	ERJ3GEYG102	M.RESISTOR CH 1/16W 1K	1	
R3763	ERJ3GEYJ821	M.RESISTOR CH 1/16W 820	1	
R3764	ERJ3GEYJ681	M.RESISTOR CH 1/16W 680	1	
R3765	ERJ3GEYG102	M.RESISTOR CH 1/16W 1K	1	
R3766	ERJ3GEYG471	M.RESISTOR CH 1/16W 470	1	
R3767	ERJ6GEYG102	M.RESISTOR CH 1/10W 1K	1	
R3768,69	ERJ3GEYJ121	M.RESISTOR CH 1/16W 120	2	
R3770	ERJ3GEYJ820	M.RESISTOR CH 1/16W 82	1	
R3771	ERJ3GEYJ103	M.RESISTOR CH 1/16W 10K	1	
R3772	ERJ3GEYG102	M.RESISTOR CH 1/16W 1K	1	
R3775	ERJ3GEYJ470	M.RESISTOR CH 1/16W 47	1	
R3776	ERJ3GEYJ222	M.RESISTOR CH 1/16W 2.2K	1	
R3777	ERJ3GEYJ221	M.RESISTOR CH 1/16W 220	1	
R3780	ERJ6GEY0R00	M.RESISTOR CH 1/10W 0	1	
R3781	ERJ3GEYJ681	M.RESISTOR CH 1/16W 680	1	
R3782	ERJ3GEYJ391	M.RESISTOR CH 1/16W 390	1	
R3783	ERJ3GEYJ222	M.RESISTOR CH 1/16W 2.2K	1	
R3784	ERJ3GEYJ221	M.RESISTOR CH 1/16W 220	1	
R3785	ERJ3GEYJ681	M.RESISTOR CH 1/16W 680	1	
R3786	ERJ3GEYJ391	M.RESISTOR CH 1/16W 390	1	
R3787	ERJ3GEYJ222	M.RESISTOR CH 1/16W 2.2K	1	
R3788	ERJ3GEYJ221	M.RESISTOR CH 1/16W 220	1	
R3797	ERJ3GEYJ333	M.RESISTOR CH 1/16W 33K	1	
R3798	ERJ6RBD151	M.RESISTOR CH 1/10W 150	1	
R3799	ERJ6RBD752	M.RESISTOR CH 1/10W 7.5K	1	
R3804	ERJ3GEYG471	M.RESISTOR CH 1/16W 470	1	
R3805,06	ERJ3GEYG472	M.RESISTOR CH 1/16W 4.7K	2	
R3807	ERJ3GEYG152	M.RESISTOR CH 1/16W 1.5K	1	
R3808	ERJ3GEYJ223	M.RESISTOR CH 1/16W 22K	1	
R3810	ERJ3GEYJ563	M.RESISTOR CH 1/16W 56K	1	
R3811	ERJ3GEYG822	M.RESISTOR CH 1/16W 8.2K	1	
R3812	ERJ3GEYG472	M.RESISTOR CH 1/16W 4.7K	1	
R3814	ERJ3GEYJ821	M.RESISTOR CH 1/16W 820	1	
R3815	ERJ3GEYJ181	M.RESISTOR CH 1/16W 180	1	
R3816	ERJ3GEYJ821	M.RESISTOR CH 1/16W 820	1	
R3817	ERJ3GEYG152	M.RESISTOR CH 1/16W 1.5K	1	
R3818	ERJ3GEYJ470	M.RESISTOR CH 1/16W 47	1	
R3819,20	ERJ3GEYG102	M.RESISTOR CH 1/16W 1K	2	
R3821	ERJ3GEYG152	M.RESISTOR CH 1/16W 1.5K	1	
R3822	ERJ3GEYG102	M.RESISTOR CH 1/16W 1K	1	
R3823	ERJ3GEYG152	M.RESISTOR CH 1/16W 1.5K	1	

Ref.No.	Part No.	Part Name & Description	Pcs	Remarks
R3824,25	ERJ3GEYG102	M.RESISTOR CH 1/16W 1K	2	
R3826,27	ERJ3GEYG152	M.RESISTOR CH 1/16W 1.5K	2	
R3828	ERJ3GEYJ330	M.RESISTOR CH 1/16W 33	1	
R3829	ERJ3GEYJ681	M.RESISTOR CH 1/16W 680	1	
R3830	ERJ3GEYG472	M.RESISTOR CH 1/16W 4.7K	1	
R3831	ERJ3GEYJ105	M.RESISTOR CH 1/16W 1M	1	
R3832	ERJ3GEYJ154	M.RESISTOR CH 1/16W 150K	1	
R3833	ERJ3GEYG152	M.RESISTOR CH 1/16W 1.5K	1	
R3834-36	ERJ3GEYJ333	M.RESISTOR CH 1/16W 33K	3	
R3837	ERJ3GEYG152	M.RESISTOR CH 1/16W 1.5K	1	
R3838	ERJ3GEYJ470	M.RESISTOR CH 1/16W 47	1	
R3839	ERJ3GEY0R00	M.RESISTOR CH 1/16W 0	1	
R3840-42	ERJ3GEYG102	M.RESISTOR CH 1/16W 1K	3	
R3843	ERJ3GEYJ181	M.RESISTOR CH 1/16W 180	1	
R3844	ERJ3GEYG152	M.RESISTOR CH 1/16W 1.5K	1	
R3845,46	ERJ3GEYG102	M.RESISTOR CH 1/16W 1K	2	
R3847	ERJ3GEYJ470	M.RESISTOR CH 1/16W 47	1	
R3848	ERJ3GEYG332	M.RESISTOR CH 1/16W 3.3K	1	
R3849,50	ERJ3GEYG102	M.RESISTOR CH 1/16W 1K	2	
R3851	ERJ3GEYJ470	M.RESISTOR CH 1/16W 47	1	
R3852	ERJ3GEYG332	M.RESISTOR CH 1/16W 3.3K	1	
R3867	ERJ3GEYG102	M.RESISTOR CH 1/16W 1K	1	
R3868	ERJ3GEYJ221	M.RESISTOR CH 1/16W 220	1	
R3872	ERJ3GEYG332	M.RESISTOR CH 1/16W 3.3K	1	
R3876	ERJ3GEY0R00	M.RESISTOR CH 1/16W 0	1	
R3878,79	ERJ6RBD301	M.RESISTOR CH 1/10W 300	2	
R3880	ERJ3GEYG332	M.RESISTOR CH 1/16W 3.3K	1	
R3881	ERJ3GEYJ562	M.RESISTOR CH 1/16W 5.6K	1	
R3882	ERJ3GEYG472	M.RESISTOR CH 1/16W 4.7K	1	
R3883	ERJ3GEYJ473	M.RESISTOR CH 1/16W 47K	1	
R3884	ERJ3GEYJ222	M.RESISTOR CH 1/16W 2.2K	1	
R3885	ERJ3GEYG332	M.RESISTOR CH 1/16W 3.3K	1	
R3886	ERJ3GEYJ562	M.RESISTOR CH 1/16W 5.6K	1	
R3887	ERJ3GEYG472	M.RESISTOR CH 1/16W 4.7K	1	
R3888	ERJ3GEYJ473	M.RESISTOR CH 1/16W 47K	1	
R3889	ERJ3GEYJ222	M.RESISTOR CH 1/16W 2.2K	1	
R3895	ERJ3GEYJ222	M.RESISTOR CH 1/16W 2.2K	1	
R3896,97	ERJ3GEYG332	M.RESISTOR CH 1/16W 3.3K	2	
R3898	ERJ3GEYJ103	M.RESISTOR CH 1/16W 10K	1	
R3899	ERJ3GEYJ221	M.RESISTOR CH 1/16W 220	1	
R3900	ERJ3GEYG102	M.RESISTOR CH 1/16W 1K	1	
R3901	ERJ3GEYJ104	M.RESISTOR CH 1/16W 100K	1	
R3902	ERJ3GEYJ151	M.RESISTOR CH 1/16W 150	1	
R3903,04	ERJ3GEYJ101	M.RESISTOR CH 1/16W 100	2	
R3905	ERJ3GEYJ222	M.RESISTOR CH 1/16W 2.2K	1	
R3906	ERJ3GEYJ103	M.RESISTOR CH 1/16W 10K	1	
R3907	ERJ6GEYG102	M.RESISTOR CH 1/10W 1K	1	
R3908	ERJ6RBD151	M.RESISTOR CH 1/10W 150	1	
R3909	ERJ3GEYJ470	M.RESISTOR CH 1/16W 47	1	
R3910,11	ERJ3GEYG472	M.RESISTOR CH 1/16W 4.7K	2	
R3912	ERJ3GEYG152	M.RESISTOR CH 1/16W 1.5K	1	
R3913	ERJ3GEYJ393	M.RESISTOR CH 1/16W 39K	1	
R3915,16	ERJ3GEYJ563	M.RESISTOR CH 1/16W 56K	2	
R3917	ERJ3GEYJ222	M.RESISTOR CH 1/16W 2.2K	1	
R3918	ERJ3GEYJ470	M.RESISTOR CH 1/16W 47	1	
R3919,20	ERJ3GEYG152	M.RESISTOR CH 1/16W 1.5K	2	
R3921	ERJ3GEYJ470	M.RESISTOR CH 1/16W 47	1	
R3922	ERJ3GEYG332	M.RESISTOR CH 1/16W 3.3K	1	
R3923	ERJ3GEYJ103	M.RESISTOR CH 1/16W 10K	1	
R3924	ERJ3GEYJ151	M.RESISTOR CH 1/16W 150	1	
R3925	ERJ3GEYJ562	M.RESISTOR CH 1/16W 5.6K	1	
R3926,27	ERJ6RBD821	M.RESISTOR CH 1/10W 820	2	
R3928,29	ERJ3GEYJ470	M.RESISTOR CH 1/16W 47	2	
R3930	ERJ3GEYJ563	M.RESISTOR CH 1/16W 56K	1	
R3931,32	ERJ6RBD821	M.RESISTOR CH 1/10W 820	2	
R3933	ERJ3GEYJ124	M.RESISTOR CH 1/16W 120K	1	
R3934,35	ERJ6RBD821	M.RESISTOR CH 1/10W 820	2	
R3936	VRE006610102	M.RESISTOR CH 1/10W 1K	1	
R3937	ERJ3GEYJ151	M.RESISTOR CH 1/16W 150	1	
R3938	ERJ3GEY0R00	M.RESISTOR CH 1/16W 0	1	
R3939	ERJ3GEYG102	M.RESISTOR CH 1/16W 1K	1	
R3940	ERJ3GEYG472	M.RESISTOR CH 1/16W 4.7K	1	
R3941	ERJ3GEYJ223	M.RESISTOR CH 1/16W 22K	1	
R3942,43	ERJ3GEYJ473	M.RESISTOR CH 1/16W 47K	2	
R3944	ERJ3GEYG472	M.RESISTOR CH 1/16W 4.7K	1	

Ref.No.	Part No.	Part Name & Description	Pcs	Remarks
R3945	ERJ3GEYJ223	M.RESISTOR CH 1/16W 22K	1	
R3946	ERJ3GEYJ563	M.RESISTOR CH 1/16W 56K	1	
R3947	ERJ3GEYJ392	M.RESISTOR CH 1/16W 3.9K	1	
R3948	ERJ3GEYJ681	M.RESISTOR CH 1/16W 680	1	
R3949	ERJ3GEYJ391	M.RESISTOR CH 1/16W 390	1	
R3950	ERJ3GEYG332	M.RESISTOR CH 1/16W 3.3K	1	
R3951	ERJ3GEYG472	M.RESISTOR CH 1/16W 4.7K	1	
R3952	ERJ3GEYJ153	M.RESISTOR CH 1/16W 15K	1	
R3953	ERJ3GEYJ821	M.RESISTOR CH 1/16W 820	1	
R3954	ERJ3GEYG472	M.RESISTOR CH 1/16W 4.7K	1	
R3955,56	ERJ3GEYJ221	M.RESISTOR CH 1/16W 220	2	
R3957	ERJ3GEYG102	M.RESISTOR CH 1/16W 1K	1	
R3958	ERJ3GEYG332	M.RESISTOR CH 1/16W 3.3K	1	
R3959	ERJ3GEYG102	M.RESISTOR CH 1/16W 1K	1	
R3960,61	ERJ3GEYJ221	M.RESISTOR CH 1/16W 220	2	
R3962	ERJ6RBD221	M.RESISTOR CH 1/10W 220	1	
R3963	ERJ6RBD181	M.RESISTOR CH 1/10W 180	1	
R3964	ERJ6RBD102	M.RESISTOR CH 1/10W 1K	1	
R3965	ERJ6RBD201	M.RESISTOR CH 1/10W 200	1	
R3966	ERJ3GEYJ222	M.RESISTOR CH 1/16W 2.2K	1	
R3967	ERJ6RBD151	M.RESISTOR CH 1/10W 150	1	
R3968	ERJ6RBD752	M.RESISTOR CH 1/10W 7.5K	1	
R3969	ERJ3GEYJ222	M.RESISTOR CH 1/16W 2.2K	1	
R3970	ERJ6RBD121	M.RESISTOR CH 1/10W 120	1	
R3971	ERJ6RBD271	M.RESISTOR CH 1/10W 270	1	
R3972	ERJ3GEYJ222	M.RESISTOR CH 1/16W 2.2K	1	
R3973	ERJ6RBD121	M.RESISTOR CH 1/10W 120	1	
R3974	ERJ6RBD271	M.RESISTOR CH 1/10W 270	1	
R3975	ERJ6RBD391	M.RESISTOR CH 1/10W 390	1	
R3976	ERJ6RED270	M.RESISTOR CH 1/10W 27	1	
R3977	ERJ3GEYJ151	M.RESISTOR CH 1/16W 150	1	
R3978	ERJ3GEYJ222	M.RESISTOR CH 1/16W 2.2K	1	
R3979	ERJ3GEYG471	M.RESISTOR CH 1/16W 470	1	
R3980	ERJ3GEYJ222	M.RESISTOR CH 1/16W 2.2K	1	
R3981	ERJ3GEYG471	M.RESISTOR CH 1/16W 470	1	
R3982	ERJ3GEYJ222	M.RESISTOR CH 1/16W 2.2K	1	
R3983-85	ERJ3GEYJ470	M.RESISTOR CH 1/16W 47	3	
R3986	ERJ3GEYJ223	M.RESISTOR CH 1/16W 22K	1	
R3987	ERJ3GEYJ473	M.RESISTOR CH 1/16W 47K	1	
R3988	ERJ3GEYJ272	M.RESISTOR CH 1/16W 2.7K	1	
R3989	ERJ3GEYJ470	M.RESISTOR CH 1/16W 47	1	
R3990	ERJ3GEYJ821	M.RESISTOR CH 1/16W 820	1	
R3991	ERJ3GEYJ470	M.RESISTOR CH 1/16W 47	1	
R3992,93	ERJ3GEYJ681	M.RESISTOR CH 1/16W 680	2	
R3994	ERJ3GEYJ331	M.RESISTOR CH 1/16W 330	1	
R3995	ERJ3GEYG102	M.RESISTOR CH 1/16W 1K	1	
R3996	ERJ3GEY0R00	M.RESISTOR CH 1/16W 0	1	
R3997,98	ERJ3GEYJ470	M.RESISTOR CH 1/16W 47	2	
R3999	ERJ3GEYJ100	M.RESISTOR CH 1/16W 10	1	
SW3950	VSS0372	SWITCH	1	
TG3001-04	VJR0646	TEST POINT	4	
TH3800	ERTD2FHL102S	THERMISTOR 1K	1	
TP3070	VJR0646	TEST POINT	1	
TP3100-06	VJR0646	TEST POINT	7	
TP3200	VJR0646	TEST POINT	1	
TP3650,51	VJR0646	TEST POINT	2	
TP3950	VJR0646	TEST POINT	1	
VC3070	ECV1ZW20X53T	TRIMMER	1	
VR3100	VRV0113B202	V.RESISTOR 2K	1	
VR3101	VRV0113B502	V.RESISTOR 5K	1	
VR3102	VRV0113B202	V.RESISTOR 2K	1	
VR3160	VRV0161B203	V.RESISTOR 20K	1	
VR3201	VRV0161B502	V.RESISTOR 5K	1	
VR3260	VRV0161B502	V.RESISTOR 5K	1	
VR3280	VRV0161B203	V.RESISTOR 20K	1	
VR3700	VRV0161B101	V.RESISTOR 100	1	
VR3701	VRV0113B501	V.RESISTOR 500	1	
VR3702	VRV0161B102	V.RESISTOR 1K	1	
VR3703	VRV0113B102	V.RESISTOR 1K	1	

Ref.No.	Part No.	Part Name & Description	Pcs	Remarks
VR3704	VRV0161B101	V.RESISTOR 100	1	
VR3705	VRV0161B102	V.RESISTOR 1K	1	
VR3706	VRV0161B101	V.RESISTOR 100	1	
VR3801	VRV0161B203	V.RESISTOR 20K	1	
VR3802,03	VRV0161B502	V.RESISTOR 5K	2	
VR3804,05	VRV0161B102	V.RESISTOR 1K	2	
VR3806,07	VRV0161B202	V.RESISTOR 2K	2	
VR3809,10	VRV0113B203	V.RESISTOR 20K	2	
VR3900	VRV0161B502	V.RESISTOR 5K	1	
VR3901	VRV0113B102	V.RESISTOR 1K	1	
VR3902	VRV0113B502	V.RESISTOR 5K	1	
VR3903	VRV0161B102	V.RESISTOR 1K	1	
VR3904	VRV0113B203	V.RESISTOR 20K	1	
VR3905	VRV0113B503	V.RESISTOR 50K	1	
VR3950	VRV0113B102	V.RESISTOR 1K	1	
VR3995	VRV0113B501	V.RESISTOR 500	1	
VR3996	VRV0113B102	V.RESISTOR 1K	1	
X3070	VSX0081	CRYSTAL OSCILLATOR	1	
X3160	VSX0338	CRYSTAL OSCILLATOR	1	
X3260	VSX0788	CRYSTAL OSCILLATOR	1	
X3280	VSX0338	CRYSTAL OSCILLATOR	1	
		MISCELLANEOUS		
	VML2143	CARD PULLER	1	
	VML2144	CARD PULLER	1	

Ref.No.	Part No.	Part Name & Description	Pcs	Remarks

Ref.No.	Part No.	Part Name & Description	Pcs	Remarks
■ E4	VEP83410B	F4 VIDEO OUT P.C.BOARD	1	(RTL)FOR AJ-D850E
C3001	ECEV1CV470Q	E.CAPACITOR CH 16V 47U	1	
C3002	ECUX1E104ZFV	C.CAPACITOR CH 25V 0.1U	1	
C3003	ECEV1CV470Q	E.CAPACITOR CH 16V 47U	1	
C3004	ECUX1E104ZFV	C.CAPACITOR CH 25V 0.1U	1	
C3010	ECUX1E104ZFV	C.CAPACITOR CH 25V 0.1U	1	
C3011,12	ECEV1EV100Q	E.CAPACITOR CH 25V 10U	2	
C3013	ECUX1E104ZFV	C.CAPACITOR CH 25V 0.1U	1	
C3014,15	ECEV1CV100Q	E.CAPACITOR CH 16V 10U	2	
C3016	ECUX1E104ZFV	C.CAPACITOR CH 25V 0.1U	1	
C3017,18	ECEV1CV100Q	E.CAPACITOR CH 16V 10U	2	
C3019	ECUX1E104ZFV	C.CAPACITOR CH 25V 0.1U	1	
C3020,21	ECEV1EV100Q	E.CAPACITOR CH 25V 10U	2	
C3022	ECUX1E104ZFV	C.CAPACITOR CH 25V 0.1U	1	
C3023	ECEV1CV100Q	E.CAPACITOR CH 16V 10U	1	
C3024,25	ECUX1E104ZFV	C.CAPACITOR CH 25V 0.1U	2	
C3026	ECEV1CV100Q	E.CAPACITOR CH 16V 10U	1	
C3027,28	ECUX1E104ZFV	C.CAPACITOR CH 25V 0.1U	2	
C3029	ECEV1CV470Q	E.CAPACITOR CH 16V 47U	1	
C3030,31	ECUX1E104ZFV	C.CAPACITOR CH 25V 0.1U	2	
C3032	ECEV1CV100Q	E.CAPACITOR CH 16V 10U	1	
C3033,34	ECUX1E104ZFV	C.CAPACITOR CH 25V 0.1U	2	
C3035	ECEV1CV100Q	E.CAPACITOR CH 16V 10U	1	
C3036,37	ECUX1E104ZFV	C.CAPACITOR CH 25V 0.1U	2	
C3038	ECEV1CV100Q	E.CAPACITOR CH 16V 10U	1	
C3039,40	ECUX1E104ZFV	C.CAPACITOR CH 25V 0.1U	2	
C3041	ECEV1CV100Q	E.CAPACITOR CH 16V 10U	1	
C3042	ECUX1E104ZFV	C.CAPACITOR CH 25V 0.1U	1	
C3050-57	ECUX1E104ZFV	C.CAPACITOR CH 25V 0.1U	8	
C3058	ECUX1H271JCV	C.CAPACITOR CH 50V 270P	1	
C3070-74	ECUX1E104ZFV	C.CAPACITOR CH 25V 0.1U	5	
C3075	ECUX1H820JCV	C.CAPACITOR CH 50V 82P	1	
C3076	ECEV1EV100Q	E.CAPACITOR CH 25V 10U	1	
C3077	ECUX1E104ZFV	C.CAPACITOR CH 25V 0.1U	1	
C3078	ECUX1H103KBV	C.CAPACITOR CH 50V 0.01U	1	
C3079,80	ECUX1E104ZFV	C.CAPACITOR CH 25V 0.1U	2	
C3081	ECUX1H103KBV	C.CAPACITOR CH 50V 0.01U	1	
C3082	ECEV1EN3R3Q	E.CAPACITOR CH 25V 3.3U	1	
C3083	ECUX1H102JCV	C.CAPACITOR CH 50V 1000P	1	
C3084	ECUX1H103KBV	C.CAPACITOR CH 50V 0.01U	1	
C3085,86	ECUX1H470JCV	C.CAPACITOR CH 50V 47P	2	
C3087	ECUX1H103KBV	C.CAPACITOR CH 50V 0.01U	1	
C3088,89	ECUX1E104ZFV	C.CAPACITOR CH 25V 0.1U	2	
C3090	ECUX1H151JCV	C.CAPACITOR CH 50V 150P	1	
C3091,92	ECUX1E104ZFV	C.CAPACITOR CH 25V 0.1U	2	
C3100-04	ECUX1E104ZFV	C.CAPACITOR CH 25V 0.1U	5	
C3105,06	ECUX1H102JCV	C.CAPACITOR CH 50V 1000P	2	
C3107	ECUX1H181JCV	C.CAPACITOR CH 50V 180P	1	
C3108	ECUX1H101JCV	C.CAPACITOR CH 50V 100P	1	
C3109	ECUX1H102JCV	C.CAPACITOR CH 50V 1000P	1	
C3110	ECUX1H101JCV	C.CAPACITOR CH 50V 100P	1	
C3111	ECUX1E104ZFV	C.CAPACITOR CH 25V 0.1U	1	
C3112,13	ECUX1H150JCV	C.CAPACITOR CH 50V 15P	2	
C3114	ECUX1E104ZFV	C.CAPACITOR CH 25V 0.1U	1	
C3117-19	ECUX1E104ZFV	C.CAPACITOR CH 25V 0.1U	3	
C3150,51	ECUX1E104ZFV	C.CAPACITOR CH 25V 0.1U	2	
C3152,53	ECUX1H103KBV	C.CAPACITOR CH 50V 0.01U	2	
C3154	ECEV1HN010Q	E.CAPACITOR CH 50V 1U	1	
C3155	ECUX1H102JCV	C.CAPACITOR CH 50V 1000P	1	
C3156,57	ECUX1E104ZFV	C.CAPACITOR CH 25V 0.1U	2	
C3160-65	ECUX1E104ZFV	C.CAPACITOR CH 25V 0.1U	6	
C3166,67	ECUX1H270JCV	C.CAPACITOR CH 50V 27P	2	
C3168,69	ECUX1H820JCV	C.CAPACITOR CH 50V 82P	2	
C3170,71	ECUX1E104ZFV	C.CAPACITOR CH 25V 0.1U	2	
C3172,73	ECUX1H103KBV	C.CAPACITOR CH 50V 0.01U	2	
C3174	ECEV1HN010Q	E.CAPACITOR CH 50V 1U	1	
C3175,76	ECUX1E104ZFV	C.CAPACITOR CH 25V 0.1U	2	
C3177	ECUX1E104KBN	C.CAPACITOR CH 25V 0.1U	1	
C3178	ECUX1H103KBV	C.CAPACITOR CH 50V 0.01U	1	
C3179-82	ECUX1E104KBN	C.CAPACITOR CH 25V 0.1U	4	
C3183,84	ECUX1E104ZFV	C.CAPACITOR CH 25V 0.1U	2	
C3200-03	ECUX1E104ZFV	C.CAPACITOR CH 25V 0.1U	4	

Ref.No.	Part No.	Part Name & Description	Pcs	Remarks
C3207	ECUX1H471JCV	C.CAPACITOR CH 50V 470P	1	
C3208	ECUX1H101JCV	C.CAPACITOR CH 50V 100P	1	
C3250,51	ECUX1E104ZFV	C.CAPACITOR CH 25V 0.1U	2	
C3252,53	ECUX1H103KBV	C.CAPACITOR CH 50V 0.01U	2	
C3254	ECEV1HN010Q	E.CAPACITOR CH 50V 1U	1	
C3255	ECUX1H102JCV	C.CAPACITOR CH 50V 1000P	1	
C3256,57	ECUX1E104ZFV	C.CAPACITOR CH 25V 0.1U	2	
C3260-65	ECUX1E104ZFV	C.CAPACITOR CH 25V 0.1U	6	
C3266,67	ECUX1H103KBV	C.CAPACITOR CH 50V 0.01U	2	
C3268	ECEV1HN010Q	E.CAPACITOR CH 50V 1U	1	
C3269	ECUX1H102JCV	C.CAPACITOR CH 50V 1000P	1	
C3270	ECUX1E104ZFV	C.CAPACITOR CH 25V 0.1U	1	
C3280-83	ECUX1E104ZFV	C.CAPACITOR CH 25V 0.1U	4	
C3284,85	ECUX1E104KBN	C.CAPACITOR CH 25V 0.1U	2	
C3286	ECUX1H103KBV	C.CAPACITOR CH 50V 0.01U	1	
C3287,88	ECUX1E104ZFV	C.CAPACITOR CH 25V 0.1U	2	
C3289	ECUX1E104KBN	C.CAPACITOR CH 25V 0.1U	1	
C3290	ECUX1H103KBV	C.CAPACITOR CH 50V 0.01U	1	
C3291	ECEV1HN010Q	E.CAPACITOR CH 50V 1U	1	
C3292	ECUX1E104ZFV	C.CAPACITOR CH 25V 0.1U	1	
C3300-04	ECUX1E104ZFV	C.CAPACITOR CH 25V 0.1U	5	
C3330,31	ECUX1E104ZFV	C.CAPACITOR CH 25V 0.1U	2	
C3340-43	ECUX1E104ZFV	C.CAPACITOR CH 25V 0.1U	4	
C3350-53	ECUX1E104ZFV	C.CAPACITOR CH 25V 0.1U	4	
C3370-83	ECUX1E104ZFV	C.CAPACITOR CH 25V 0.1U	14	
C3430	ECUX1E104ZFV	C.CAPACITOR CH 25V 0.1U	1	
C3432-40	ECUX1E104ZFV	C.CAPACITOR CH 25V 0.1U	9	
C3442,43	ECUX1E104ZFV	C.CAPACITOR CH 25V 0.1U	2	
C3445,46	ECUX1E104ZFV	C.CAPACITOR CH 25V 0.1U	2	
C3452	ECUX1H050CCV	C.CAPACITOR CH 50V 5P	1	
C3455	ECUX1H101JCV	C.CAPACITOR CH 50V 100P	1	
C3457	ECUX1H020CCV	C.CAPACITOR CH 50V 2P	1	
C3460	ECUX1E104ZFV	C.CAPACITOR CH 25V 0.1U	1	
C3464	ECEV1CV100Q	E.CAPACITOR CH 16V 10U	1	
C3465	ECUX1E104ZFV	C.CAPACITOR CH 25V 0.1U	1	
C3466	ECEV1CV100Q	E.CAPACITOR CH 16V 10U	1	
C3467,68	ECUX1E104ZFV	C.CAPACITOR CH 25V 0.1U	2	
C3469	ECEV1CV100Q	E.CAPACITOR CH 16V 10U	1	
C3470	ECUX1H470JCV	C.CAPACITOR CH 50V 47P	1	
C3471	ECUX1H020CCV	C.CAPACITOR CH 50V 2P	1	
C3472-74	ECUX1E104ZFV	C.CAPACITOR CH 25V 0.1U	3	
C3475	ECEV1CV100Q	E.CAPACITOR CH 16V 10U	1	
C3476-83	ECUX1E104ZFV	C.CAPACITOR CH 25V 0.1U	8	
C3484	ECEV1CV100Q	E.CAPACITOR CH 16V 10U	1	
C3485	ECUX1H102JCV	C.CAPACITOR CH 50V 1000P	1	
C3486	ECUX1H101JCV	C.CAPACITOR CH 50V 100P	1	
C3487	ECUX1E104ZFV	C.CAPACITOR CH 25V 0.1U	1	
C3500-11	ECUX1E104ZFV	C.CAPACITOR CH 25V 0.1U	12	
C3551-57	ECUX1E104ZFV	C.CAPACITOR CH 25V 0.1U	7	
C3576-79	ECUX1E104ZFV	C.CAPACITOR CH 25V 0.1U	4	
C3580,81	ECUM1E104ZFN	C.CAPACITOR CH 25V 0.1U	2	
C3582	ECEV0JV330Q	E.CAPACITOR CH6.3V 33U	1	
C3583-86	ECUX1E104ZFV	C.CAPACITOR CH 25V 0.1U	4	
C3588-92	ECUX1E104ZFV	C.CAPACITOR CH 25V 0.1U	5	
C3600	ECEV1EV330Q	E.CAPACITOR CH 25V 33U	1	
C3601	ECUX1E104ZFV	C.CAPACITOR CH 25V 0.1U	1	
C3602	ECEV1CV470Q	E.CAPACITOR CH 16V 47U	1	
C3603	ECUX1E104ZFV	C.CAPACITOR CH 25V 0.1U	1	
C3604	ECEV1CV470Q	E.CAPACITOR CH 16V 47U	1	
C3605	ECUX1E104ZFV	C.CAPACITOR CH 25V 0.1U	1	
C3606	ECEV1EV330Q	E.CAPACITOR CH 25V 33U	1	
C3607,08	ECUX1E104ZFV	C.CAPACITOR CH 25V 0.1U	2	
C3609	ECEV1CV100Q	E.CAPACITOR CH 16V 10U	1	
C3610,11	ECUX1E104ZFV	C.CAPACITOR CH 25V 0.1U	2	
C3612	ECEV1CV100Q	E.CAPACITOR CH 16V 10U	1	
C3613,14	ECUX1E104ZFV	C.CAPACITOR CH 25V 0.1U	2	
C3615	ECEV1CV100Q	E.CAPACITOR CH 16V 10U	1	
C3616,17	ECUX1E104ZFV	C.CAPACITOR CH 25V 0.1U	2	
C3618	ECEV1CV100Q	E.CAPACITOR CH 16V 10U	1	
C3619,20	ECUX1E104ZFV	C.CAPACITOR CH 25V 0.1U	2	
C3621	ECEV1CV100Q	E.CAPACITOR CH 16V 10U	1	
C3622,23	ECUX1E104ZFV	C.CAPACITOR CH 25V 0.1U	2	
C3624	ECEV1CV100Q	E.CAPACITOR CH 16V 10U	1	
C3625,26	ECUX1E104ZFV	C.CAPACITOR CH 25V 0.1U	2	
C3627	ECEV1CV100Q	E.CAPACITOR CH 16V 10U	1	

Ref.No.	Part No.	Part Name & Description	Pcs	Remarks
C3628	ECUX1E104ZFV	C.CAPACITOR CH 25V 0.1U	1	
C3650	ECEV1CV470Q	E.CAPACITOR CH 16V 47U	1	
C3651	ECUX1H330JCV	C.CAPACITOR CH 50V 33P	1	
C3652	ECUX1H220JCV	C.CAPACITOR CH 50V 22P	1	
C3653	ECUX1H680JCV	C.CAPACITOR CH 50V 68P	1	
C3654,55	ECUX1E104KBN	C.CAPACITOR CH 25V 0.1U	2	
C3656	ECEV1HN010Q	E.CAPACITOR CH 50V 1U	1	
C3657	ECUX1E104KBN	C.CAPACITOR CH 25V 0.1U	1	
C3658	ECUX1E104ZFV	C.CAPACITOR CH 25V 0.1U	1	
C3659	ECUX1H103KBV	C.CAPACITOR CH 50V 0.01U	1	
C3660	ECUX1H820JCV	C.CAPACITOR CH 50V 82P	1	
C3661,62	ECUX1H103KBV	C.CAPACITOR CH 50V 0.01U	2	
C3663	ECUX1H472KBV	C.CAPACITOR CH 50V 4700P	1	
C3664	ECUX1E104ZFV	C.CAPACITOR CH 25V 0.1U	1	
C3665	ECUX1H103KBV	C.CAPACITOR CH 50V 0.01U	1	
C3666	ECUX1E104ZFV	C.CAPACITOR CH 25V 0.1U	1	
C3700	ECUX1E104ZFV	C.CAPACITOR CH 25V 0.1U	1	
C3701	ECEV1CV100Q	E.CAPACITOR CH 16V 10U	1	
C3702	ECUX1E104ZFV	C.CAPACITOR CH 25V 0.1U	1	
C3703	ECEV1CV100Q	E.CAPACITOR CH 16V 10U	1	
C3704	ECUX1E104ZFV	C.CAPACITOR CH 25V 0.1U	1	
C3705	ECEV1CV100Q	E.CAPACITOR CH 16V 10U	1	
C3706,07	ECUX1E104KBN	C.CAPACITOR CH 25V 0.1U	2	
C3708-10	ECUX1E104ZFV	C.CAPACITOR CH 25V 0.1U	3	
C3711	ECEV1CV100Q	E.CAPACITOR CH 16V 10U	1	
C3712	ECUX1H560JCV	C.CAPACITOR CH 50V 56P	1	
C3713	ECUX1H020CCV	C.CAPACITOR CH 50V 2P	1	
C3714	ECUX1H121JCV	C.CAPACITOR CH 50V 120P	1	
C3717-20	ECUX1E104ZFV	C.CAPACITOR CH 25V 0.1U	4	
C3721	ECUX1H560JCV	C.CAPACITOR CH 50V 56P	1	
C3725	ECUX1H180JCV	C.CAPACITOR CH 50V 18P	1	
C3726	ECUX1H560JCV	C.CAPACITOR CH 50V 56P	1	
C3727,28	ECUX1E104ZFV	C.CAPACITOR CH 25V 0.1U	2	
C3729	ECUX1H100DCV	C.CAPACITOR CH 50V 10P	1	
C3730	ECUX1H680JCV	C.CAPACITOR CH 50V 68P	1	
C3731	ECEV1CV100Q	E.CAPACITOR CH 16V 10U	1	
C3732	ECUX1H151JCV	C.CAPACITOR CH 50V 150P	1	
C3733,34	ECUX1E104ZFV	C.CAPACITOR CH 25V 0.1U	2	
C3735	ECUX1H221JCV	C.CAPACITOR CH 50V 220P	1	
C3739,40	ECUX1E104ZFV	C.CAPACITOR CH 25V 0.1U	2	
C3745	ECUX1H180JCV	C.CAPACITOR CH 50V 18P	1	
C3746	ECUX1H560JCV	C.CAPACITOR CH 50V 56P	1	
C3747,48	ECUX1E104ZFV	C.CAPACITOR CH 25V 0.1U	2	
C3749	ECUX1H100DCV	C.CAPACITOR CH 50V 10P	1	
C3750	ECUX1H680JCV	C.CAPACITOR CH 50V 68P	1	
C3751	ECEV1CV100Q	E.CAPACITOR CH 16V 10U	1	
C3752,53	ECUX1E104ZFV	C.CAPACITOR CH 25V 0.1U	2	
C3754	ECUX1H331JCV	C.CAPACITOR CH 50V 330P	1	
C3756-58	ECUX1H102JCV	C.CAPACITOR CH 50V 1000P	3	
C3759	ECUX1H821JCV	C.CAPACITOR CH 50V 820P	1	
C3760	ECUX1E104ZFV	C.CAPACITOR CH 25V 0.1U	1	
C3761-64	ECEA1CGE221	E.CAPACITOR 16V 220U	4	
C3800	ECUX1E104ZFV	C.CAPACITOR CH 25V 0.1U	1	
C3801,02	ECEV1CV100Q	E.CAPACITOR CH 16V 10U	2	
C3803	ECUX1E104ZFV	C.CAPACITOR CH 25V 0.1U	1	
C3804	ECEV1CV100Q	E.CAPACITOR CH 16V 10U	1	
C3805	ECUX1E104ZFV	C.CAPACITOR CH 25V 0.1U	1	
C3810	ECUX1H560JCV	C.CAPACITOR CH 50V 56P	1	
C3811	ECUX1H181JCV	C.CAPACITOR CH 50V 180P	1	
C3812,13	ECUX1E104ZFV	C.CAPACITOR CH 25V 0.1U	2	
C3814,15	ECUX1E104KBN	C.CAPACITOR CH 25V 0.1U	2	
C3817	ECUX1H103KBV	C.CAPACITOR CH 50V 0.01U	1	
C3818,19	ECUX1E104ZFV	C.CAPACITOR CH 25V 0.1U	2	
C3820,21	ECEV1CV100Q	E.CAPACITOR CH 16V 10U	2	
C3824	ECUX1E104KBN	C.CAPACITOR CH 25V 0.1U	1	
C3825,26	ECUX1E104ZFV	C.CAPACITOR CH 25V 0.1U	2	
C3827,28	ECUX1H220JCV	C.CAPACITOR CH 50V 22P	2	
C3829	ECUX1E104ZFV	C.CAPACITOR CH 25V 0.1U	1	
C3830	ECUX1H820JCV	C.CAPACITOR CH 50V 82P	1	
C3831	ECUX1E104KBN	C.CAPACITOR CH 25V 0.1U	1	
C3832,33	ECUX1E104ZFV	C.CAPACITOR CH 25V 0.1U	2	
C3834	ECUX1H100DCV	C.CAPACITOR CH 50V 10P	1	
C3835,36	ECUX1E104KBN	C.CAPACITOR CH 25V 0.1U	2	
C3837	ECUX1H271JCV	C.CAPACITOR CH 50V 270P	1	
C3838	ECUX1H151JCV	C.CAPACITOR CH 50V 150P	1	

Ref.No.	Part No.	Part Name & Description	Pcs	Remarks
C3839	ECUX1E104KBN	C.CAPACITOR CH 25V 0.1U	1	
C3840	ECUX1H820JCV	C.CAPACITOR CH 50V 82P	1	
C3841-43	ECUX1E104ZFV	C.CAPACITOR CH 25V 0.1U	3	
C3844	ECUX1E104KBN	C.CAPACITOR CH 25V 0.1U	1	
C3845,46	ECUX1H220JCV	C.CAPACITOR CH 50V 22P	2	
C3847	ECUX1E104KBN	C.CAPACITOR CH 25V 0.1U	1	
C3848,49	ECUX1H220JCV	C.CAPACITOR CH 50V 22P	2	
C3850-52	ECUX1E104ZFV	C.CAPACITOR CH 25V 0.1U	3	
C3853	ECUX1H120JCV	C.CAPACITOR CH 50V 12P	1	
C3854,55	ECUX1E104ZFV	C.CAPACITOR CH 25V 0.1U	2	
C3856	ECUX1C104KBV	C.CAPACITOR CH 16V 0.1U	1	
C3857-60	ECUX1E104ZFV	C.CAPACITOR CH 25V 0.1U	4	
C3861	ECUM1E473KBN	C.CAPACITOR CH 25V 0.047U	1	
C3862	ECEV1CV100Q	E.CAPACITOR CH 16V 10U	1	
C3864,65	ECUX1E104ZFV	C.CAPACITOR CH 25V 0.1U	2	
C3866	ECEV0JV470Q	E.CAPACITOR CH6.3V 47U	1	
C3867	ECUX1E104ZFV	C.CAPACITOR CH 25V 0.1U	1	
C3868	ECEV1CV100Q	E.CAPACITOR CH 16V 10U	1	
C3869	ECEV0JV470Q	E.CAPACITOR CH6.3V 47U	1	
C3870	ECUM1E473KBN	C.CAPACITOR CH 25V 0.047U	1	
C3871	ECUX1E104ZFV	C.CAPACITOR CH 25V 0.1U	1	
C3873	ECUX1E104ZFV	C.CAPACITOR CH 25V 0.1U	1	
C3875	ECEV1CV100Q	E.CAPACITOR CH 16V 10U	1	
C3876	ECUM1E473KBN	C.CAPACITOR CH 25V 0.047U	1	
C3877	ECUX1E104KBN	C.CAPACITOR CH 25V 0.1U	1	
C3878	ECUX1H270JCV	C.CAPACITOR CH 50V 27P	1	
C3879	ECUX1H221JCV	C.CAPACITOR CH 50V 220P	1	
C3881	ECUX1H270JCV	C.CAPACITOR CH 50V 27P	1	
C3883	ECUX1H101JCV	C.CAPACITOR CH 50V 100P	1	
C3884	ECUX1H100DCV	C.CAPACITOR CH 50V 10P	1	
C3885	ECUX1H470JCV	C.CAPACITOR CH 50V 47P	1	
C3886	ECUX1H330JCV	C.CAPACITOR CH 50V 33P	1	
C3890	ECUX1E104ZFV	C.CAPACITOR CH 25V 0.1U	1	
C3893,94	ECUX1E104ZFV	C.CAPACITOR CH 25V 0.1U	2	
C3900	ECEV1CV100Q	E.CAPACITOR CH 16V 10U	1	
C3901	ECUX1E104ZFV	C.CAPACITOR CH 25V 0.1U	1	
C3902	ECEV1CV100Q	E.CAPACITOR CH 16V 10U	1	
C3903	ECUX1E104ZFV	C.CAPACITOR CH 25V 0.1U	1	
C3904	ECUX1H020CCV	C.CAPACITOR CH 50V 2P	1	
C3905	ECUX1H151JCV	C.CAPACITOR CH 50V 150P	1	
C3906	ECUX1H470JCV	C.CAPACITOR CH 50V 47P	1	
C3907	ECUX1H560JCV	C.CAPACITOR CH 50V 56P	1	
C3910,11	ECUX1E104ZFV	C.CAPACITOR CH 25V 0.1U	2	
C3914	ECUX1E104ZFV	C.CAPACITOR CH 25V 0.1U	1	
C3915	ECUX1H390JCV	C.CAPACITOR CH 50V 39P	1	
C3918-20	ECUX1E104ZFV	C.CAPACITOR CH 25V 0.1U	3	
C3921,22	ECUX1E104KBN	C.CAPACITOR CH 25V 0.1U	2	
C3924	ECUX1H103KBV	C.CAPACITOR CH 50V 0.01U	1	
C3925,26	ECUX1E104ZFV	C.CAPACITOR CH 25V 0.1U	2	
C3927	ECUX1H470JCV	C.CAPACITOR CH 50V 47P	1	
C3928	ECUX1E104KBN	C.CAPACITOR CH 25V 0.1U	1	
C3929,30	ECUX1E104ZFV	C.CAPACITOR CH 25V 0.1U	2	
C3931	ECUX1H220JCV	C.CAPACITOR CH 50V 22P	1	
C3932	ECUX1H020CCV	C.CAPACITOR CH 50V 2P	1	
C3933,34	ECUX1E104ZFV	C.CAPACITOR CH 25V 0.1U	2	
C3935	ECUX1H150JCV	C.CAPACITOR CH 50V 15P	1	
C3936	ECUX1H220JCV	C.CAPACITOR CH 50V 22P	1	
C3937,38	ECUX1H470JCV	C.CAPACITOR CH 50V 47P	2	
C3939	ECUX1H220JCV	C.CAPACITOR CH 50V 22P	1	
C3940	ECEV1CV100Q	E.CAPACITOR CH 16V 10U	1	
C3942	ECUX1H102JCV	C.CAPACITOR CH 50V 1000P	1	
C3943	ECUX1H821JCV	C.CAPACITOR CH 50V 820P	1	
C3944	ECUX1E104ZFV	C.CAPACITOR CH 25V 0.1U	1	
C3945	ECUX1H560JCV	C.CAPACITOR CH 50V 56P	1	
C3946	ECUX1H101JCV	C.CAPACITOR CH 50V 100P	1	
C3950	ECUX1E104ZFV	C.CAPACITOR CH 25V 0.1U	1	
C3951	ECUX1H470JCV	C.CAPACITOR CH 50V 47P	1	
C3952,53	ECUX1E104ZFV	C.CAPACITOR CH 25V 0.1U	2	
C3954	ECUX1H330JCV	C.CAPACITOR CH 50V 33P	1	
C3955	ECUX1H271JCV	C.CAPACITOR CH 50V 270P	1	
C3957,58	ECUX1E104ZFV	C.CAPACITOR CH 25V 0.1U	2	
C3959	ECUX1H270JCV	C.CAPACITOR CH 50V 27P	1	
C3960,61	ECUX1E104ZFV	C.CAPACITOR CH 25V 0.1U	2	
C3962	ECUX1H270JCV	C.CAPACITOR CH 50V 27P	1	
C3963-65	ECUX1E104ZFV	C.CAPACITOR CH 25V 0.1U	3	

Ref.No.	Part No.	Part Name & Description	Pcs	Remarks
C3966	ECUX1H820JCV	C.CAPACITOR CH 50V 82P	1	
C3990	ECUX1H470JCV	C.CAPACITOR CH 50V 47P	1	
C3991	ECUX1H220JCV	C.CAPACITOR CH 50V 22P	1	
C3992	ECUX1E104ZFV	C.CAPACITOR CH 25V 0.1U	1	
C3993	ECUX1H390JCV	C.CAPACITOR CH 50V 39P	1	
C3994,95	ECUX1E104ZFV	C.CAPACITOR CH 25V 0.1U	2	
C3996	ECUX1H070DCV	C.CAPACITOR CH 50V 7P	1	
C3997	ECUX1E104ZFV	C.CAPACITOR CH 25V 0.1U	1	
D3070	MA335	DIODE	1	
D3150	M1MA152K	DIODE	1	
D3160	M1MA152K	DIODE	1	
D3250	M1MA152K	DIODE	1	
D3260	M1MA152K	DIODE	1	
D3550-52	MA701A	DIODE	3	
D3650	MA152WK	DIODE	1	
D3651	MA717	DIODE	1	
D3800,01	MA335	DIODE	2	
D3810,11	M1MA152K	DIODE	2	
D3950	M1MA152K	DIODE	1	
D3960,61	M1MA152K	DIODE	2	
FL3010-13	VLF1016A223	FILTER	4	
FL3700	VLF1294	FILTER	1	
FL3701,02	VLF1295	FILTER	2	
FL3900	VLF1016A223	FILTER	1	
FL3901	VLF1462	FILTER	1	
IC3010	NJM78L09UA	IC	1	
IC3011	NJM78L05UA	IC	1	
IC3012	NJM79L05UA	IC	1	
IC3013	NJM78L09UA	IC	1	
IC3014	NJM78L05UA	IC	1	
IC3015	NJM79L05UA	IC	1	
IC3016	NJM79L09UA	IC	1	
IC3050	SLA7220F5A	IC	1	
IC3051	EPM7128STC15	IC	1	
IC3070	MC74HC125AF	IC	1	
IC3071	NE521D	IC	1	
IC3072	MC74HC4053F	IC	1	
IC3073	NJM084M	IC	1	
IC3074	MC74HC4053F	IC	1	
IC3100	UPD65650J203	IC	1	
IC3101-03	SN74LS221NS	IC	3	
IC3104,05	SN74LS04NS	IC	2	
IC3106	MC74HC00AF	IC	1	
IC3109	D485505G25	IC	1	
IC3111	MC74HC574AF	IC	1	
IC3112	UPD42280G3	IC	1	
IC3150	MC74HC125AF	IC	1	
IC3151	NJM082BM	IC	1	
IC3160	MC74HC74AF	IC	1	
IC3161	74F112SJ	IC	1	
IC3162	MC74HC86AF	IC	1	
IC3163	MC74HC02AF	IC	1	
IC3164	SN74LS123NS	IC	1	
IC3165	SN74LS221NS	IC	1	
IC3166	SN74LS05NS	IC	1	
IC3167-69	MC74HC574AF	IC	3	
IC3170	SN74AS244AN	IC	1	
IC3171	NJM084M	IC	1	
IC3172	DAC10GS	IC	1	
IC3200	UPD65650J203	IC	1	
IC3202	SN74LS221NS	IC	1	
IC3250	MC74HC125AF	IC	1	
IC3251	NJM082BM	IC	1	
IC3260	NJM082BM	IC	1	
IC3261	74F08SJ	IC	1	
IC3262	SN74AS74ANS	IC	1	
IC3263	74F574SJ	IC	1	
IC3264,65	SN74AS244AN	IC	2	
IC3280-82	MC74HC574AF	IC	3	
IC3283	DAC10GS	IC	1	
IC3284	NJM082BM	IC	1	
IC3300,01	THCT574AF	IC	2	

Ref.No.	Part No.	Part Name & Description	Pcs	Remarks
IC3302	T74HCT541AF	IC	1	
IC3303,04	THCT574AF	IC	2	
IC3330,31	SN74AS244AN	IC	2	
IC3340	EPM7128STC15	IC	1	
IC3350	MB87D132	IC	1	
IC3370	L7A1519	IC	1	
IC3371	EPM7128STC15	IC	1	
IC3372-74	D485505G25	IC	3	
IC3430	74ALS541SJ	IC	1	
IC3432-34	MC10H124M	IC	3	
IC3435	74ALS541SJ	IC	1	
IC3436	MC10H124M	IC	1	
IC3437,38	74F244SJ	IC	2	
IC3439,40	D485505G25	IC	2	
IC3500,01	SN74S1051NS	IC	2	
IC3502	74F541SJ	IC	1	
IC3503	74F245SJ	IC	1	
IC3504,05	74F541SJ	IC	2	
IC3506,07	UPD71055GB	IC	2	
IC3508,09	THCT574AF	IC	2	
IC3510,11	SN74S1051NS	IC	2	
IC3550,51	D485505G25	IC	2	
IC3552	CG46183-134	IC	1	
IC3581-84	D485505G25	IC	4	
IC3585,86	THCT574AF	IC	2	
IC3587	EPM7128STC15	IC	1	
IC3588,89	TLCX244FT	IC	2	
IC3591-93	TVHT244FT	IC	3	
IC3595	TVHT244FT	IC	1	
IC3596	XC62AP3002P	IC	1	
IC3600	AN78N09	IC	1	
IC3601	AN78N05	IC	1	
IC3602	AN79N09	IC	1	
IC3603	AN78N09	IC	1	
IC3604	NJM78L05UA	IC	1	
IC3605	NJM79L05UA	IC	1	
IC3606	AN79N09	IC	1	
IC3650	AN91A12S	IC	1	
IC3651	NE521D	IC	1	
IC3700	ADV7123KST50	IC	1	
IC3702-04	LT1228CS8	IC	3	
IC3801	DAC10GS	IC	1	
IC3802	NJM082BM	IC	1	
IC3804	MC74HC4053F	IC	1	
IC3805	M51272FP	IC	1	
IC3900	LT1228CS8	IC	1	
IC3901	NJM2534V	IC	1	
IC3902	DAC10GS	IC	1	
IC3903	NJM082BM	IC	1	
IC3904	AD828AR	IC	1	
IC3990	NJM2534V	IC	1	
IC3996	LT1228CS8	IC	1	
IC3997	CXD1175AM	IC	1	
IC3998	NJM78L05UA	IC	1	
L3001-07	VLP0133	COIL	7	
L3071	VLQ0163J221	COIL 220UH	1	
L3550	VLP0133	COIL	1	
L3650	VLQ0163J390	COIL 39UH	1	
L3651	VLQ0163J221	COIL 220UH	1	
L3700	VLQ0163J220	COIL 22UH	1	
L3701	VLQ0576	COIL	1	
L3703	VLQ0163J220	COIL 22UH	1	
L3704	VLQ0163J100	COIL 10UH	1	
L3707	VLQ0163J6R8	COIL 6.8UH	1	
L3708	VLQ0163J2R2	COIL 2.2UH	1	
L3711	VLQ0163J6R8	COIL 6.8UH	1	
L3712	VLQ0163J2R2	COIL 2.2UH	1	
L3800-02	VLQ0163J220	COIL 22UH	3	
L3803	VLQ0163J390	COIL 39UH	1	
L3804	VLQ0163J121	COIL 120UH	1	
L3805-07	VLQ0163J470	COIL 47UH	3	
L3808	VLQ0163J150	COIL 15UH	1	
L3809	VLQ0163J5R6	COIL 5.6UH	1	
L3810	VLQ0163J6R8	COIL 6.8UH	1	

Ref.No.	Part No.	Part Name & Description	Pcs	Remarks
L3900	VLQ0163J100	COIL 10UH	1	
L3901,02	VLQ0163J220	COIL 22UH	2	
L3950	VLQ0163J101	COIL 100UH	1	
L3951,52	VLQ0163J470	COIL 47UH	2	
L3990	VLQ0163J180	COIL 18UH	1	
L3992	VLQ0163J390	COIL 39UH	1	
L3995	VLQ0163J150	COIL 15UH	1	
L3997	VLQ0319K101	COIL 100UH	1	
P3001,02	VJP3454B096	CONNECTOR (MALE)	2	
P3370	VJP1233T	CONNECTOR (MALE) 6P	1	
Q3070	MSB709-R	TRANSISTOR	1	
Q3071,72	2SK608-R	TRANSISTOR	2	
Q3700	MSD601-R	TRANSISTOR	1	
Q3701	MSB709-R	TRANSISTOR	1	
Q3702,03	MSD601-R	TRANSISTOR	2	
Q3704	MSB709-R	TRANSISTOR	1	
Q3707-09	MSB709-R	TRANSISTOR	3	
Q3710,11	MSD601-R	TRANSISTOR	2	
Q3712	MSB709-R	TRANSISTOR	1	
Q3715,16	MSB709-R	TRANSISTOR	2	
Q3717	MSD601-R	TRANSISTOR	1	
Q3718,19	2SB709A-R	TRANSISTOR	2	
Q3720	MSD602-R	TRANSISTOR	1	
Q3721	MSD601-R	TRANSISTOR	1	
Q3722	MSB709-R	TRANSISTOR	1	
Q3723	MSD601-R	TRANSISTOR	1	
Q3724	2SA1532-C	TRANSISTOR	1	
Q3800	MSB709-R	TRANSISTOR	1	
Q3801	MSC2295-B	TRANSISTOR	1	
Q3802	MSB709-R	TRANSISTOR	1	
Q3803	MSC2295-B	TRANSISTOR	1	
Q3804,05	MSB709-R	TRANSISTOR	2	
Q3806	MSC2295-B	TRANSISTOR	1	
Q3807	MSB709-R	TRANSISTOR	1	
Q3808,09	MSD601-R	TRANSISTOR	2	
Q3810	XN6501	TRANSISTOR-RESISTOR	1	
Q3811,12	MSC2295-B	TRANSISTOR	2	
Q3813	MSB709-R	TRANSISTOR	1	
Q3814	MSD601-R	TRANSISTOR	1	
Q3900,01	MSD601-R	TRANSISTOR	2	
Q3902	MSB709-R	TRANSISTOR	1	
Q3903	2SB709A-R	TRANSISTOR	1	
Q3904,05	2SA1532-C	TRANSISTOR	2	
Q3906,07	MSB709-R	TRANSISTOR	2	
Q3908	2SA1532-C	TRANSISTOR	1	
Q3950	2SC2404-D	TRANSISTOR	1	
Q3951,52	MSB709-R	TRANSISTOR	2	
Q3953	MSD601-R	TRANSISTOR	1	
Q3954-56	MSB709-R	TRANSISTOR	3	
Q3957-60	MSD601-R	TRANSISTOR	4	
Q3990	2SA1532-C	TRANSISTOR	1	
Q3991	2SB709A-R	TRANSISTOR	1	
Q3995	2SB709A-R	TRANSISTOR	1	
Q3996	2SA1532-C	TRANSISTOR	1	
Q3997	2SB709A-R	TRANSISTOR	1	
R3011	ERJ3GEYG102	M.RESISTOR CH 1/16W 1K	1	
R3017	ERJ3GEYJ681	M.RESISTOR CH 1/16W 680	1	
R3018	ERJ3GEYJ391	M.RESISTOR CH 1/16W 390	1	
R3019	ERJ3GEY0R00	M.RESISTOR CH 1/16W 0	1	
R3022	ERJ3GEYJ470	M.RESISTOR CH 1/16W 47	1	
R3023	ERJ3GEYG102	M.RESISTOR CH 1/16W 1K	1	
R3024	ERJ3GEY0R00	M.RESISTOR CH 1/16W 0	1	
R3025	ERJ3GEYJ271	M.RESISTOR CH 1/16W 270	1	
R3026	ERJ3GEYG102	M.RESISTOR CH 1/16W 1K	1	
R3027	ERJ3GEYJ124	M.RESISTOR CH 1/16W 120K	1	
R3029	ERJ3GEYJ392	M.RESISTOR CH 1/16W 3.9K	1	
R3032	ERJ3GEYG472	M.RESISTOR CH 1/16W 4.7K	1	
R3033	ERJ3GEYJ470	M.RESISTOR CH 1/16W 47	1	
R3034	ERJ3GEY0R00	M.RESISTOR CH 1/16W 0	1	
R3035	ERJ3GEYJ221	M.RESISTOR CH 1/16W 220	1	
R3036	ERJ3GEYJ222	M.RESISTOR CH 1/16W 2.2K	1	
R3037	ERJ3GEYJ103	M.RESISTOR CH 1/16W 10K	1	

Ref.No.	Part No.	Part Name & Description	Pcs	Remarks
R3038,39	ERJ3GEYG332	M.RESISTOR CH 1/16W 3.3K	2	
R3040	ERJ3GEY0R00	M.RESISTOR CH 1/16W 0	1	
R3043	ERJ3GEYJ222	M.RESISTOR CH 1/16W 2.2K	1	
R3044,45	ERJ3GEYG102	M.RESISTOR CH 1/16W 1K	2	
R3046	ERJ3GEY0R00	M.RESISTOR CH 1/16W 0	1	
R3050-53	ERJ3GEYG102	M.RESISTOR CH 1/16W 1K	4	
R3054-56	ERJ3GEYJ101	M.RESISTOR CH 1/16W 100	3	
R3061,62	ERJ3GEYJ101	M.RESISTOR CH 1/16W 100	2	
R3064	ERJ3GEYJ101	M.RESISTOR CH 1/16W 100	1	
R3065-67	ERJ3GEYG102	M.RESISTOR CH 1/16W 1K	3	
R3068	ERJ3GEYG471	M.RESISTOR CH 1/16W 470	1	
R3070	ERJ3GEYJ183	M.RESISTOR CH 1/16W 18K	1	
R3071	ERJ3GEYJ333	M.RESISTOR CH 1/16W 33K	1	
R3072	ERJ3GEYG102	M.RESISTOR CH 1/16W 1K	1	
R3073	ERJ3GEYJ103	M.RESISTOR CH 1/16W 10K	1	
R3074	ERJ3GEYJ222	M.RESISTOR CH 1/16W 2.2K	1	
R3075	ERJ3GEYG152	M.RESISTOR CH 1/16W 1.5K	1	
R3076	ERJ3GEYG471	M.RESISTOR CH 1/16W 470	1	
R3077	ERJ3GEYJ153	M.RESISTOR CH 1/16W 15K	1	
R3078	ERJ3GEYJ333	M.RESISTOR CH 1/16W 33K	1	
R3079	ERJ3GEYJ105	M.RESISTOR CH 1/16W 1M	1	
R3080	ERJ3GEYJ823	M.RESISTOR CH 1/16W 82K	1	
R3081,82	ERJ3GEYG102	M.RESISTOR CH 1/16W 1K	2	
R3083	ERJ3GEYJ563	M.RESISTOR CH 1/16W 56K	1	
R3084	ERJ3GEYJ183	M.RESISTOR CH 1/16W 18K	1	
R3085	ERJ3GEYJ333	M.RESISTOR CH 1/16W 33K	1	
R3086,87	ERJ3GEYJ563	M.RESISTOR CH 1/16W 56K	2	
R3088,89	ERJ3GEYG332	M.RESISTOR CH 1/16W 3.3K	2	
R3090	ERJ3GEYG102	M.RESISTOR CH 1/16W 1K	1	
R3091	ERJ3GEYJ101	M.RESISTOR CH 1/16W 100	1	
R3092,93	ERJ3GEYG102	M.RESISTOR CH 1/16W 1K	2	
R3094	ERJ3GEYJ333	M.RESISTOR CH 1/16W 33K	1	
R3095-97	ERJ3GEYG102	M.RESISTOR CH 1/16W 1K	3	
R3099	ERJ3GEYJ222	M.RESISTOR CH 1/16W 2.2K	1	
R3100-08	ERJ3GEYG102	M.RESISTOR CH 1/16W 1K	9	
R3112	ERJ3GEY0R00	M.RESISTOR CH 1/16W 0	1	
R3113-23	ERJ3GEYG102	M.RESISTOR CH 1/16W 1K	11	
R3125,26	ERJ3GEYG102	M.RESISTOR CH 1/16W 1K	2	
R3127	ERJ3GEYJ563	M.RESISTOR CH 1/16W 56K	1	
R3128	ERJ3GEYG102	M.RESISTOR CH 1/16W 1K	1	
R3129,30	ERJ3GEYJ222	M.RESISTOR CH 1/16W 2.2K	2	
R3131	ERJ3GEYJ562	M.RESISTOR CH 1/16W 5.6K	1	
R3132	ERJ3GEYG332	M.RESISTOR CH 1/16W 3.3K	1	
R3133,34	ERJ6RBD331	M.RESISTOR CH 1/10W 330	2	
R3137	ERJ3GEYG102	M.RESISTOR CH 1/16W 1K	1	
R3139	ERJ3GEYG102	M.RESISTOR CH 1/16W 1K	1	
R3141	ERJ3GEY0R00	M.RESISTOR CH 1/16W 0	1	
R3142	ERJ3GEYG102	M.RESISTOR CH 1/16W 1K	1	
R3143,44	ERJ3GEYJ272	M.RESISTOR CH 1/16W 2.7K	2	
R3150	ERJ3GEYG471	M.RESISTOR CH 1/16W 470	1	
R3151	ERJ3GEYJ333	M.RESISTOR CH 1/16W 33K	1	
R3152,53	ERJ3GEYJ103	M.RESISTOR CH 1/16W 10K	2	
R3154	ERJ3GEYJ223	M.RESISTOR CH 1/16W 22K	1	
R3155	ERJ3GEYJ105	M.RESISTOR CH 1/16W 1M	1	
R3156,57	ERJ3GEYG102	M.RESISTOR CH 1/16W 1K	2	
R3160,61	ERJ3GEYG102	M.RESISTOR CH 1/16W 1K	2	
R3162	ERJ3GEYJ101	M.RESISTOR CH 1/16W 100	1	
R3163	ERJ3GEYG102	M.RESISTOR CH 1/16W 1K	1	
R3164,65	ERJ6RBD822	M.RESISTOR CH 1/10W 8.2K	2	
R3166	ERJ6RBD222	M.RESISTOR CH 1/10W 2.2K	1	
R3167	ERJ6RBD512	M.RESISTOR CH 1/10W 5.1K	1	
R3168	ERJ3GEYJ101	M.RESISTOR CH 1/16W 100	1	
R3169	ERJ3GEYG152	M.RESISTOR CH 1/16W 1.5K	1	
R3170	ERJ3GEYJ823	M.RESISTOR CH 1/16W 82K	1	
R3171,72	ERJ3GEYJ333	M.RESISTOR CH 1/16W 33K	2	
R3173	ERJ3GEYJ103	M.RESISTOR CH 1/16W 10K	1	
R3174	ERJ3GEYJ105	M.RESISTOR CH 1/16W 1M	1	
R3175	ERJ3GEYJ391	M.RESISTOR CH 1/16W 390	1	
R3176	ERJ3GEYJ103	M.RESISTOR CH 1/16W 10K	1	
R3177,78	ERJ3GEYG472	M.RESISTOR CH 1/16W 4.7K	2	
R3179	ERJ3GEYJ333	M.RESISTOR CH 1/16W 33K	1	
R3180	ERJ3GEYJ681	M.RESISTOR CH 1/16W 680	1	
R3181	ERJ3GEYJ821	M.RESISTOR CH 1/16W 820	1	
R3182	ERJ3GEYJ183	M.RESISTOR CH 1/16W 18K	1	
R3183	ERJ3GEYJ101	M.RESISTOR CH 1/16W 100	1	

Ref.No.	Part No.	Part Name & Description	Pcs	Remarks
R3184,85	ERJ3GEYJ272	M.RESISTOR CH 1/16W 2.7K	2	
R3200	ERJ3GEY0R00	M.RESISTOR CH 1/16W 0	1	
R3202	ERJ3GEY0R00	M.RESISTOR CH 1/16W 0	1	
R3208-14	ERJ3GEYG102	M.RESISTOR CH 1/16W 1K	7	
R3216	ERJ3GEY0R00	M.RESISTOR CH 1/16W 0	1	
R3217-28	ERJ3GEYG102	M.RESISTOR CH 1/16W 1K	12	
R3230,31	ERJ3GEYJ272	M.RESISTOR CH 1/16W 2.7K	2	
R3232-34	ERJ3GEYG102	M.RESISTOR CH 1/16W 1K	3	
R3235	ERJ3GEYJ101	M.RESISTOR CH 1/16W 100	1	
R3237	ERJ3GEYG102	M.RESISTOR CH 1/16W 1K	1	
R3238	ERJ3GEYJ181	M.RESISTOR CH 1/16W 180	1	
R3240	ERJ3GEYG472	M.RESISTOR CH 1/16W 4.7K	1	
R3241	ERJ3GEYJ181	M.RESISTOR CH 1/16W 180	1	
R3242	ERJ6RBD682	M.RESISTOR CH 1/10W 6.8K	1	
R3243	ERJ3GEYJ222	M.RESISTOR CH 1/16W 2.2K	1	
R3244	ERJ3GEYG471	M.RESISTOR CH 1/16W 470	1	
R3245	ERJ3GEY0R00	M.RESISTOR CH 1/16W 0	1	
R3246	ERJ3GEYJ681	M.RESISTOR CH 1/16W 680	1	
R3248,49	ERJ3GEYJ272	M.RESISTOR CH 1/16W 2.7K	2	
R3250	ERJ3GEYG471	M.RESISTOR CH 1/16W 470	1	
R3251	ERJ3GEYJ333	M.RESISTOR CH 1/16W 33K	1	
R3252,53	ERJ3GEYJ103	M.RESISTOR CH 1/16W 10K	2	
R3254	ERJ3GEYG332	M.RESISTOR CH 1/16W 3.3K	1	
R3255	ERJ3GEYJ105	M.RESISTOR CH 1/16W 1M	1	
R3256,57	ERJ3GEYG102	M.RESISTOR CH 1/16W 1K	2	
R3260	ERJ3GEYG471	M.RESISTOR CH 1/16W 470	1	
R3261	ERJ3GEYJ333	M.RESISTOR CH 1/16W 33K	1	
R3262	ERJ3GEYJ103	M.RESISTOR CH 1/16W 10K	1	
R3263	ERJ3GEYG472	M.RESISTOR CH 1/16W 4.7K	1	
R3264	ERJ3GEYJ103	M.RESISTOR CH 1/16W 10K	1	
R3265	ERJ3GEYJ105	M.RESISTOR CH 1/16W 1M	1	
R3266	ERJ3GEYG102	M.RESISTOR CH 1/16W 1K	1	
R3267-69	ERJ3GEYJ101	M.RESISTOR CH 1/16W 100	3	
R3270	ERJ3GEYG102	M.RESISTOR CH 1/16W 1K	1	
R3271	ERJ3GEYJ101	M.RESISTOR CH 1/16W 100	1	
R3280,81	ERJ3GEYG102	M.RESISTOR CH 1/16W 1K	2	
R3282,83	ERJ3GEYG472	M.RESISTOR CH 1/16W 4.7K	2	
R3284	ERJ3GEYJ681	M.RESISTOR CH 1/16W 680	1	
R3285	ERJ3GEYG682	M.RESISTOR CH 1/16W 6.8K	1	
R3286	ERJ3GEYJ473	M.RESISTOR CH 1/16W 47K	1	
R3287,88	ERJ3GEYJ333	M.RESISTOR CH 1/16W 33K	2	
R3289	ERJ3GEYG102	M.RESISTOR CH 1/16W 1K	1	
R3291	ERJ3GEYG152	M.RESISTOR CH 1/16W 1.5K	1	
R3292	ERJ3GEYJ823	M.RESISTOR CH 1/16W 82K	1	
R3293	ERJ3GEYJ104	M.RESISTOR CH 1/16W 100K	1	
R3294	ERJ3GEYJ105	M.RESISTOR CH 1/16W 1M	1	
R3295	ERJ3GEYG102	M.RESISTOR CH 1/16W 1K	1	
R3296	ERJ3GEYJ272	M.RESISTOR CH 1/16W 2.7K	1	
R3300-13	ERJ3GEYJ103	M.RESISTOR CH 1/16W 10K	14	
R3315,16	ERJ3GEYJ103	M.RESISTOR CH 1/16W 10K	2	
R3317	ERJ3GEYG102	M.RESISTOR CH 1/16W 1K	1	
R3318-21	ERJ3GEYJ103	M.RESISTOR CH 1/16W 10K	4	
R3324	ERJ3GEYG102	M.RESISTOR CH 1/16W 1K	1	
R3325	ERJ3GEYJ101	M.RESISTOR CH 1/16W 100	1	
R3326	ERJ3GEYG102	M.RESISTOR CH 1/16W 1K	1	
R3327,28	ERJ3GEYJ101	M.RESISTOR CH 1/16W 100	2	
R3330	ERJ3GEYJ101	M.RESISTOR CH 1/16W 100	1	
R3332-34	ERJ3GEYJ101	M.RESISTOR CH 1/16W 100	3	
R3340,41	ERJ3GEYG102	M.RESISTOR CH 1/16W 1K	2	
R3342	ERJ3GEYJ101	M.RESISTOR CH 1/16W 100	1	
R3343	ERJ3GEY0R00	M.RESISTOR CH 1/16W 0	1	
R3344	ERJ3GEYJ222	M.RESISTOR CH 1/16W 2.2K	1	
R3345	ERJ3GEYJ101	M.RESISTOR CH 1/16W 100	1	
R3346	ERJ3GEYG102	M.RESISTOR CH 1/16W 1K	1	
R3351	ERJ3GEY0R00	M.RESISTOR CH 1/16W 0	1	
R3373	ERJ3GEYJ101	M.RESISTOR CH 1/16W 100	1	
R3374-86	ERJ3GEYG102	M.RESISTOR CH 1/16W 1K	13	
R3388-90	ERJ3GEYG102	M.RESISTOR CH 1/16W 1K	3	
R3391,92	ERJ3GEYJ101	M.RESISTOR CH 1/16W 100	2	
R3395-98	ERJ3GEYG102	M.RESISTOR CH 1/16W 1K	4	
R3400-07	ERJ3GEYJ103	M.RESISTOR CH 1/16W 10K	8	
R3409-16	ERJ3GEYJ103	M.RESISTOR CH 1/16W 10K	8	
R3421,22	ERJ3GEYJ103	M.RESISTOR CH 1/16W 10K	2	
R3428,29	ERJ3GEYJ681	M.RESISTOR CH 1/16W 680	2	
R3430	ERJ3GEYJ101	M.RESISTOR CH 1/16W 100	1	

Ref.No.	Part No.	Part Name & Description	Pcs	Remarks
R3432-39	ERJ3GEYJ560	M.RESISTOR CH 1/16W 56	8	
R3441	ERJ3GEY0R00	M.RESISTOR CH 1/16W 0	1	
R3442,43	ERJ3GEYJ560	M.RESISTOR CH 1/16W 56	2	
R3444-67	ERJ3GEYJ681	M.RESISTOR CH 1/16W 680	24	
R3468-91	ERJ3GEYJ330	M.RESISTOR CH 1/16W 33	24	
R3492	ERJ3GEYJ101	M.RESISTOR CH 1/16W 100	1	
R3493-97	ERJ3GEYJ560	M.RESISTOR CH 1/16W 56	5	
R3498,99	ERJ3GEYJ330	M.RESISTOR CH 1/16W 33	2	
R3500-02	ERJ3GEYJ101	M.RESISTOR CH 1/16W 100	3	
R3503	ERJ3GEY0R00	M.RESISTOR CH 1/16W 0	1	
R3506-08	ERJ3GEYG102	M.RESISTOR CH 1/16W 1K	3	
R3510-31	ERJ3GEYJ103	M.RESISTOR CH 1/16W 10K	22	
R3536-38	ERJ3GEY0R00	M.RESISTOR CH 1/16W 0	3	
R3541,42	ERJ3GEY0R00	M.RESISTOR CH 1/16W 0	2	
R3543,44	ERJ3GEYG102	M.RESISTOR CH 1/16W 1K	2	
R3550	ERJ3GEYG102	M.RESISTOR CH 1/16W 1K	1	
R3578-80	ERJ3GEYG102	M.RESISTOR CH 1/16W 1K	3	
R3581,82	ERJ3GEYJ101	M.RESISTOR CH 1/16W 100	2	
R3584-86	ERJ3GEYJ101	M.RESISTOR CH 1/16W 100	3	
R3588-90	ERJ3GEYJ101	M.RESISTOR CH 1/16W 100	3	
R3598	ERJ3GEY0R00	M.RESISTOR CH 1/16W 0	1	
R3650	ERJ3GEYG102	M.RESISTOR CH 1/16W 1K	1	
R3651-53	ERJ3GEYJ222	M.RESISTOR CH 1/16W 2.2K	3	
R3654	ERJ3GEYG332	M.RESISTOR CH 1/16W 3.3K	1	
R3655	ERJ3GEYJ221	M.RESISTOR CH 1/16W 220	1	
R3656,57	ERJ3GEYG822	M.RESISTOR CH 1/16W 8.2K	2	
R3658	ERJ3GEYJ103	M.RESISTOR CH 1/16W 10K	1	
R3659	ERJ3GEYJ684	M.RESISTOR CH 1/16W 680K	1	
R3660	ERJ3GEYJ104	M.RESISTOR CH 1/16W 100K	1	
R3661	ERJ3GEYJ221	M.RESISTOR CH 1/16W 220	1	
R3662	ERJ3GEYJ222	M.RESISTOR CH 1/16W 2.2K	1	
R3663	ERJ3GEYJ184	M.RESISTOR CH 1/16W 180K	1	
R3664	ERJ3GEYJ222	M.RESISTOR CH 1/16W 2.2K	1	
R3665	ERJ3GEYJ333	M.RESISTOR CH 1/16W 33K	1	
R3666	ERJ3GEYJ560	M.RESISTOR CH 1/16W 56	1	
R3667	ERJ3GEYJ222	M.RESISTOR CH 1/16W 2.2K	1	
R3668	ERJ3GEYJ101	M.RESISTOR CH 1/16W 100	1	
R3669	ERJ3GEYJ560	M.RESISTOR CH 1/16W 56	1	
R3700	ERJ6RBD561	M.RESISTOR CH 1/10W 560	1	
R3701,02	ERJ3GEYJ151	M.RESISTOR CH 1/16W 150	2	
R3703	ERJ3GEYJ222	M.RESISTOR CH 1/16W 2.2K	1	
R3704,05	ERJ3RBD331	M.RESISTOR CH 3W 330	2	
R3706	ERJ3GEYJ222	M.RESISTOR CH 1/16W 2.2K	1	
R3707	ERJ3GEYJ101	M.RESISTOR CH 1/16W 100	1	
R3709	ERJ3GEYJ181	M.RESISTOR CH 1/16W 180	1	
R3710	ERJ3GEYJ101	M.RESISTOR CH 1/16W 100	1	
R3711	ERJ3GEYG102	M.RESISTOR CH 1/16W 1K	1	
R3712	ERJ3GEYJ124	M.RESISTOR CH 1/16W 120K	1	
R3713	ERJ3RBD201	M.RESISTOR CH 3W 200	1	
R3715	ERJ3GEYG471	M.RESISTOR CH 1/16W 470	1	
R3716	ERJ3GEYJ222	M.RESISTOR CH 1/16W 2.2K	1	
R3717	ERJ3GEYJ151	M.RESISTOR CH 1/16W 150	1	
R3718	ERJ3GEYJ271	M.RESISTOR CH 1/16W 270	1	
R3719	ERJ3GEYJ222	M.RESISTOR CH 1/16W 2.2K	1	
R3720,21	ERJ3RBD471	M.RESISTOR CH 3W 470	2	
R3722	ERJ3GEYJ222	M.RESISTOR CH 1/16W 2.2K	1	
R3723	ERJ3GEYJ101	M.RESISTOR CH 1/16W 100	1	
R3724	ERJ3GEYJ181	M.RESISTOR CH 1/16W 180	1	
R3725	ERJ3GEYJ101	M.RESISTOR CH 1/16W 100	1	
R3726	ERJ6GEYG102	M.RESISTOR CH 1/10W 1K	1	
R3727	ERJ3GEYJ681	M.RESISTOR CH 1/16W 680	1	
R3728	ERJ3GEYJ391	M.RESISTOR CH 1/16W 390	1	
R3729	ERJ3GEYJ222	M.RESISTOR CH 1/16W 2.2K	1	
R3730	ERJ3GEYJ681	M.RESISTOR CH 1/16W 680	1	
R3731	ERJ3GEYG102	M.RESISTOR CH 1/16W 1K	1	
R3732	ERJ3GEYJ821	M.RESISTOR CH 1/16W 820	1	
R3733	ERJ3GEYJ681	M.RESISTOR CH 1/16W 680	1	
R3734	ERJ3GEYG102	M.RESISTOR CH 1/16W 1K	1	
R3735	ERJ3GEYG471	M.RESISTOR CH 1/16W 470	1	
R3736	ERJ6GEYG102	M.RESISTOR CH 1/10W 1K	1	
R3737	ERJ3GEYJ151	M.RESISTOR CH 1/16W 150	1	
R3739	ERJ3GEYJ181	M.RESISTOR CH 1/16W 180	1	
R3740	ERJ3GEYJ103	M.RESISTOR CH 1/16W 10K	1	
R3741	ERJ3GEYG102	M.RESISTOR CH 1/16W 1K	1	
R3744	ERJ3GEYJ470	M.RESISTOR CH 1/16W 47	1	

Ref.No.	Part No.	Part Name & Description	Pcs	Remarks
R3745,46	ERJ3GEYG102	M.RESISTOR CH 1/16W 1K	2	
R3747	ERJ3GEYJ222	M.RESISTOR CH 1/16W 2.2K	1	
R3748,49	ERJ3GEYJ151	M.RESISTOR CH 1/16W 150	2	
R3750	ERJ3GEYJ222	M.RESISTOR CH 1/16W 2.2K	1	
R3751,52	ERJ3RBD471	M.RESISTOR CH 3W 470	2	
R3753	ERJ3GEYJ222	M.RESISTOR CH 1/16W 2.2K	1	
R3754	ERJ3GEYJ101	M.RESISTOR CH 1/16W 100	1	
R3755	ERJ3GEYJ222	M.RESISTOR CH 1/16W 2.2K	1	
R3756	ERJ3GEYJ103	M.RESISTOR CH 1/16W 10K	1	
R3757,58	ERJ3GEYG332	M.RESISTOR CH 1/16W 3.3K	2	
R3761	ERJ3GEYJ681	M.RESISTOR CH 1/16W 680	1	
R3762	ERJ3GEYG102	M.RESISTOR CH 1/16W 1K	1	
R3763	ERJ3GEYJ821	M.RESISTOR CH 1/16W 820	1	
R3764	ERJ3GEYJ681	M.RESISTOR CH 1/16W 680	1	
R3765	ERJ3GEYG102	M.RESISTOR CH 1/16W 1K	1	
R3766	ERJ3GEYG471	M.RESISTOR CH 1/16W 470	1	
R3767	ERJ6GEYG102	M.RESISTOR CH 1/10W 1K	1	
R3768	ERJ3GEYJ270	M.RESISTOR CH 1/16W 27	1	
R3770	ERJ3GEYJ121	M.RESISTOR CH 1/16W 120	1	
R3771	ERJ3GEYJ103	M.RESISTOR CH 1/16W 10K	1	
R3772	ERJ3GEYG102	M.RESISTOR CH 1/16W 1K	1	
R3775	ERJ3GEYJ470	M.RESISTOR CH 1/16W 47	1	
R3776	ERJ3GEYJ222	M.RESISTOR CH 1/16W 2.2K	1	
R3777	ERJ3GEYJ221	M.RESISTOR CH 1/16W 220	1	
R3780	ERJ6GEY0R00	M.RESISTOR CH 1/10W 0	1	
R3781	ERJ3GEYJ681	M.RESISTOR CH 1/16W 680	1	
R3782	ERJ3GEYJ391	M.RESISTOR CH 1/16W 390	1	
R3783	ERJ3GEYJ222	M.RESISTOR CH 1/16W 2.2K	1	
R3784	ERJ3GEYJ221	M.RESISTOR CH 1/16W 220	1	
R3785	ERJ3GEYJ681	M.RESISTOR CH 1/16W 680	1	
R3786	ERJ3GEYJ391	M.RESISTOR CH 1/16W 390	1	
R3787	ERJ3GEYJ222	M.RESISTOR CH 1/16W 2.2K	1	
R3788	ERJ3GEYJ221	M.RESISTOR CH 1/16W 220	1	
R3797	ERJ3GEYJ333	M.RESISTOR CH 1/16W 33K	1	
R3798	ERJ6RBD151	M.RESISTOR CH 1/10W 150	1	
R3804	ERJ3GEYG471	M.RESISTOR CH 1/16W 470	1	
R3805,06	ERJ3GEYG472	M.RESISTOR CH 1/16W 4.7K	2	
R3807	ERJ3GEYG152	M.RESISTOR CH 1/16W 1.5K	1	
R3808	ERJ3GEYJ223	M.RESISTOR CH 1/16W 22K	1	
R3810	ERJ3GEYJ563	M.RESISTOR CH 1/16W 56K	1	
R3811,12	ERJ3GEYG472	M.RESISTOR CH 1/16W 4.7K	2	
R3814	ERJ3GEYJ821	M.RESISTOR CH 1/16W 820	1	
R3815	ERJ3GEYJ181	M.RESISTOR CH 1/16W 180	1	
R3816	ERJ3GEYJ821	M.RESISTOR CH 1/16W 820	1	
R3817	ERJ3GEYG152	M.RESISTOR CH 1/16W 1.5K	1	
R3818	ERJ3GEYJ470	M.RESISTOR CH 1/16W 47	1	
R3819,20	ERJ3GEYG102	M.RESISTOR CH 1/16W 1K	2	
R3821	ERJ3GEYG152	M.RESISTOR CH 1/16W 1.5K	1	
R3822	ERJ3GEYG102	M.RESISTOR CH 1/16W 1K	1	
R3823	ERJ3GEYG152	M.RESISTOR CH 1/16W 1.5K	1	
R3824,25	ERJ3GEYG102	M.RESISTOR CH 1/16W 1K	2	
R3826,27	ERJ3GEYG152	M.RESISTOR CH 1/16W 1.5K	2	
R3828	ERJ3GEYJ330	M.RESISTOR CH 1/16W 33	1	
R3829	ERJ3GEYJ681	M.RESISTOR CH 1/16W 680	1	
R3830	ERJ3GEYG472	M.RESISTOR CH 1/16W 4.7K	1	
R3831	ERJ3GEYJ105	M.RESISTOR CH 1/16W 1M	1	
R3832	ERJ3GEYJ154	M.RESISTOR CH 1/16W 150K	1	
R3833	ERJ3GEYG152	M.RESISTOR CH 1/16W 1.5K	1	
R3834-36	ERJ3GEYJ333	M.RESISTOR CH 1/16W 33K	3	
R3837	ERJ3GEYG152	M.RESISTOR CH 1/16W 1.5K	1	
R3838	ERJ3GEYJ470	M.RESISTOR CH 1/16W 47	1	
R3840-42	ERJ3GEYG102	M.RESISTOR CH 1/16W 1K	3	
R3843	ERJ3GEYJ101	M.RESISTOR CH 1/16W 100	1	
R3844	ERJ3GEYG152	M.RESISTOR CH 1/16W 1.5K	1	
R3846	ERJ3GEYG102	M.RESISTOR CH 1/16W 1K	1	
R3847	ERJ3GEYJ470	M.RESISTOR CH 1/16W 47	1	
R3848	ERJ3GEYG332	M.RESISTOR CH 1/16W 3.3K	1	
R3850	ERJ3GEYG102	M.RESISTOR CH 1/16W 1K	1	
R3851	ERJ3GEYJ470	M.RESISTOR CH 1/16W 47	1	
R3852	ERJ3GEYG332	M.RESISTOR CH 1/16W 3.3K	1	
R3853	ERJ3GEYJ103	M.RESISTOR CH 1/16W 10K	1	
R3854	ERJ3GEYJ391	M.RESISTOR CH 1/16W 390	1	
R3855	ERJ3GEYG471	M.RESISTOR CH 1/16W 470	1	
R3856	ERJ3GEYJ103	M.RESISTOR CH 1/16W 10K	1	
R3857	ERJ3GEYJ181	M.RESISTOR CH 1/16W 180	1	

Ref.No.	Part No.	Part Name & Description	Pcs	Remarks
R3858	ERJ3GEYJ681	M.RESISTOR CH 1/16W 680	1	
R3859	ERJ3GEYJ181	M.RESISTOR CH 1/16W 180	1	
R3860,61	ERJ3GEYJ562	M.RESISTOR CH 1/16W 5.6K	2	
R3862-64	ERJ3GEYJ223	M.RESISTOR CH 1/16W 22K	3	
R3865	ERJ3GEYG152	M.RESISTOR CH 1/16W 1.5K	1	
R3866	ERJ3GEYJ470	M.RESISTOR CH 1/16W 47	1	
R3867	ERJ3GEYG102	M.RESISTOR CH 1/16W 1K	1	
R3868	ERJ3GEYJ221	M.RESISTOR CH 1/16W 220	1	
R3872	ERJ3GEYG332	M.RESISTOR CH 1/16W 3.3K	1	
R3877	ERJ3GEYJ221	M.RESISTOR CH 1/16W 220	1	
R3878,79	ERJ6RBD301	M.RESISTOR CH 1/10W 300	2	
R3880	ERJ3GEYG332	M.RESISTOR CH 1/16W 3.3K	1	
R3881	ERJ3GEYJ562	M.RESISTOR CH 1/16W 5.6K	1	
R3882	ERJ3GEYG472	M.RESISTOR CH 1/16W 4.7K	1	
R3883	ERJ3GEYJ473	M.RESISTOR CH 1/16W 47K	1	
R3884	ERJ3GEYJ222	M.RESISTOR CH 1/16W 2.2K	1	
R3885	ERJ3GEYG332	M.RESISTOR CH 1/16W 3.3K	1	
R3886	ERJ3GEYJ562	M.RESISTOR CH 1/16W 5.6K	1	
R3887	ERJ3GEYG472	M.RESISTOR CH 1/16W 4.7K	1	
R3888	ERJ3GEYJ473	M.RESISTOR CH 1/16W 47K	1	
R3889	ERJ3GEYJ222	M.RESISTOR CH 1/16W 2.2K	1	
R3890,91	ERJ3GEYG102	M.RESISTOR CH 1/16W 1K	2	
R3895	ERJ3GEYJ222	M.RESISTOR CH 1/16W 2.2K	1	
R3896,97	ERJ3GEYG332	M.RESISTOR CH 1/16W 3.3K	2	
R3898	ERJ3GEYJ103	M.RESISTOR CH 1/16W 10K	1	
R3899	ERJ3GEYJ221	M.RESISTOR CH 1/16W 220	1	
R3900	ERJ3GEYG102	M.RESISTOR CH 1/16W 1K	1	
R3901	ERJ3GEYJ104	M.RESISTOR CH 1/16W 100K	1	
R3902	ERJ3GEYJ271	M.RESISTOR CH 1/16W 270	1	
R3903	ERJ3GEYJ181	M.RESISTOR CH 1/16W 180	1	
R3904	ERJ3GEYJ101	M.RESISTOR CH 1/16W 100	1	
R3905	ERJ3GEYJ222	M.RESISTOR CH 1/16W 2.2K	1	
R3906	ERJ3GEYJ103	M.RESISTOR CH 1/16W 10K	1	
R3907	ERJ6GEYG102	M.RESISTOR CH 1/10W 1K	1	
R3908	ERJ6RBD151	M.RESISTOR CH 1/10W 150	1	
R3909	ERJ3GEYJ470	M.RESISTOR CH 1/16W 47	1	
R3910,11	ERJ3GEYG472	M.RESISTOR CH 1/16W 4.7K	2	
R3912	ERJ3GEYG152	M.RESISTOR CH 1/16W 1.5K	1	
R3913	ERJ3GEYJ393	M.RESISTOR CH 1/16W 39K	1	
R3915,16	ERJ3GEYJ563	M.RESISTOR CH 1/16W 56K	2	
R3917	ERJ3GEYJ222	M.RESISTOR CH 1/16W 2.2K	1	
R3918	ERJ3GEYJ470	M.RESISTOR CH 1/16W 47	1	
R3919,20	ERJ3GEYG152	M.RESISTOR CH 1/16W 1.5K	2	
R3921	ERJ3GEYJ470	M.RESISTOR CH 1/16W 47	1	
R3922	ERJ3GEYG332	M.RESISTOR CH 1/16W 3.3K	1	
R3923	ERJ3GEYJ103	M.RESISTOR CH 1/16W 10K	1	
R3924	ERJ3GEYJ221	M.RESISTOR CH 1/16W 220	1	
R3925	ERJ3GEYJ562	M.RESISTOR CH 1/16W 5.6K	1	
R3926,27	ERJ6RBD821	M.RESISTOR CH 1/10W 820	2	
R3928,29	ERJ3GEYJ470	M.RESISTOR CH 1/16W 47	2	
R3930	ERJ3GEYJ563	M.RESISTOR CH 1/16W 56K	1	
R3931,32	ERJ6RBD821	M.RESISTOR CH 1/10W 820	2	
R3933	ERJ3GEYJ124	M.RESISTOR CH 1/16W 120K	1	
R3934,35	ERJ6RBD821	M.RESISTOR CH 1/10W 820	2	
R3936	VRE006610102	M.RESISTOR CH 1/10W 1K	1	
R3937	ERJ3GEYJ151	M.RESISTOR CH 1/16W 150	1	
R3938	ERJ3GEY0R00	M.RESISTOR CH 1/16W 0	1	
R3939	ERJ3GEYG102	M.RESISTOR CH 1/16W 1K	1	
R3940	ERJ3GEYG472	M.RESISTOR CH 1/16W 4.7K	1	
R3941	ERJ3GEYJ223	M.RESISTOR CH 1/16W 22K	1	
R3942,43	ERJ3GEYJ473	M.RESISTOR CH 1/16W 47K	2	
R3944	ERJ3GEYG472	M.RESISTOR CH 1/16W 4.7K	1	
R3945	ERJ3GEYJ223	M.RESISTOR CH 1/16W 22K	1	
R3948	ERJ3GEYJ681	M.RESISTOR CH 1/16W 680	1	
R3949	ERJ3GEYJ391	M.RESISTOR CH 1/16W 390	1	
R3950	ERJ3GEYG332	M.RESISTOR CH 1/16W 3.3K	1	
R3951	ERJ3GEYG472	M.RESISTOR CH 1/16W 4.7K	1	
R3952	ERJ3GEYJ153	M.RESISTOR CH 1/16W 15K	1	
R3953	ERJ3GEYJ821	M.RESISTOR CH 1/16W 820	1	
R3954	ERJ3GEYG472	M.RESISTOR CH 1/16W 4.7K	1	
R3955,56	ERJ3GEYJ221	M.RESISTOR CH 1/16W 220	2	
R3957	ERJ3GEYG102	M.RESISTOR CH 1/16W 1K	1	
R3958	ERJ3GEYG332	M.RESISTOR CH 1/16W 3.3K	1	
R3959	ERJ3GEYG102	M.RESISTOR CH 1/16W 1K	1	
R3960,61	ERJ3GEYJ221	M.RESISTOR CH 1/16W 220	2	

Ref.No.	Part No.	Part Name & Description	Pcs	Remarks
R3962	ERJ6RBD221	M.RESISTOR CH 1/10W 220	1	
R3965	ERJ6RBD201	M.RESISTOR CH 1/10W 200	1	
R3966	ERJ3GEYJ222	M.RESISTOR CH 1/16W 2.2K	1	
R3967	ERJ6RBD151	M.RESISTOR CH 1/10W 150	1	
R3969	ERJ3GEYJ222	M.RESISTOR CH 1/16W 2.2K	1	
R3970	ERJ6RBD121	M.RESISTOR CH 1/10W 120	1	
R3972	ERJ3GEYJ222	M.RESISTOR CH 1/16W 2.2K	1	
R3973	ERJ6RBD121	M.RESISTOR CH 1/10W 120	1	
R3975	ERJ6RBD391	M.RESISTOR CH 1/10W 390	1	
R3976	ERJ6RED270	M.RESISTOR CH 1/10W 27	1	
R3977	ERJ3GEYJ151	M.RESISTOR CH 1/16W 150	1	
R3978	ERJ3GEYJ222	M.RESISTOR CH 1/16W 2.2K	1	
R3979	ERJ3GEYG471	M.RESISTOR CH 1/16W 470	1	
R3980	ERJ3GEYJ222	M.RESISTOR CH 1/16W 2.2K	1	
R3981	ERJ3GEYG471	M.RESISTOR CH 1/16W 470	1	
R3982	ERJ3GEYJ222	M.RESISTOR CH 1/16W 2.2K	1	
R3983-85	ERJ3GEYJ470	M.RESISTOR CH 1/16W 47	3	
R3986	ERJ3GEYJ223	M.RESISTOR CH 1/16W 22K	1	
R3987	ERJ3GEYJ473	M.RESISTOR CH 1/16W 47K	1	
R3988	ERJ3GEYJ272	M.RESISTOR CH 1/16W 2.7K	1	
R3989	ERJ3GEYJ470	M.RESISTOR CH 1/16W 47	1	
R3990	ERJ3GEYJ821	M.RESISTOR CH 1/16W 820	1	
R3991	ERJ3GEYJ470	M.RESISTOR CH 1/16W 47	1	
R3992,93	ERJ3GEYJ681	M.RESISTOR CH 1/16W 680	2	
R3994	ERJ3GEYJ391	M.RESISTOR CH 1/16W 390	1	
R3995	ERJ3GEYG102	M.RESISTOR CH 1/16W 1K	1	
R3996	ERJ3GEY0R00	M.RESISTOR CH 1/16W 0	1	
R3997,98	ERJ3GEYJ470	M.RESISTOR CH 1/16W 47	2	
R3999	ERJ3GEYJ100	M.RESISTOR CH 1/16W 10	1	
TG3001-04	VJR0646	TEST POINT	4	
TH3800	ERTD2FHL102S	THERMISTOR 1K	1	
TP3070	VJR0646	TEST POINT	1	
TP3100-06	VJR0646	TEST POINT	7	
TP3200	VJR0646	TEST POINT	1	
TP3650,51	VJR0646	TEST POINT	2	
TP3950	VJR0646	TEST POINT	1	
VC3070	ECV1ZW20X53T	TRIMMER	1	
VC3800	ECV1ZW20X53T	TRIMMER	1	
VR3100	VRV0113B202	V.RESISTOR 2K	1	
VR3101	VRV0113B502	V.RESISTOR 5K	1	
VR3102	VRV0113B202	V.RESISTOR 2K	1	
VR3160	VRV0161B203	V.RESISTOR 20K	1	
VR3201	VRV0161B502	V.RESISTOR 5K	1	
VR3260	VRV0161B502	V.RESISTOR 5K	1	
VR3280	VRV0161B203	V.RESISTOR 20K	1	
VR3700	VRV0161B101	V.RESISTOR 100	1	
VR3701	VRV0113B501	V.RESISTOR 500	1	
VR3702	VRV0161B102	V.RESISTOR 1K	1	
VR3703	VRV0113B102	V.RESISTOR 1K	1	
VR3704	VRV0161B101	V.RESISTOR 100	1	
VR3705	VRV0161B102	V.RESISTOR 1K	1	
VR3706	VRV0161B101	V.RESISTOR 100	1	
VR3801	VRV0161B203	V.RESISTOR 20K	1	
VR3802,03	VRV0161B502	V.RESISTOR 5K	2	
VR3804,05	VRV0161B102	V.RESISTOR 1K	2	
VR3806,07	VRV0161B202	V.RESISTOR 2K	2	
VR3808	VRV0161B102	V.RESISTOR 1K	1	
VR3900	VRV0161B502	V.RESISTOR 5K	1	
VR3901	VRV0113B102	V.RESISTOR 1K	1	
VR3902	VRV0113B502	V.RESISTOR 5K	1	
VR3903	VRV0161B102	V.RESISTOR 1K	1	
VR3950	VRV0113B102	V.RESISTOR 1K	1	
VR3995	VRV0113B501	V.RESISTOR 500	1	
VR3996	VRV0113B102	V.RESISTOR 1K	1	
X3070	VSX0363	CRYSTAL OSCILLATOR	1	
X3150	VSX0567A	CRYSTAL OSCILLATOR	1	
X3160	VSX0270	CRYSTAL OSCILLATOR	1	
X3250	VSX0567A	CRYSTAL OSCILLATOR	1	
X3260	VSX0788	CRYSTAL OSCILLATOR	1	

Ref.No.	Part No.	Part Name & Description	Pcs	Remarks
X3280	VSX0270	CRYSTAL OSCILLATOR	1	
		MISCELLANEOUS		
	VML2143	CARD PULLER	1	
	VML2144	CARD PULLER	1	

Ref.No.	Part No.	Part Name & Description	Pcs	Remarks
■E5	VEP83394A	F5 REC PB P.C.BOARD	1	(RTL)
■	VEP83405A	V BLK SUB P.C.BOARD	1	(RTL)FOR VEP83394A
C1	ECUX1E104ZFV	C.CAPACITOR CH 25V 0.1U	1	FOR VEP83405A
C1	ECUX1H101JCV	C.CAPACITOR CH 50V 100P	1	
C2	ECUX1E104ZFV	C.CAPACITOR CH 25V 0.1U	1	FOR VEP83405A
C2	ECUX1H101JCV	C.CAPACITOR CH 50V 100P	1	
C3	ECUX1E104ZFV	C.CAPACITOR CH 25V 0.1U	1	FOR VEP83405A
C3	ECUX1H101JCV	C.CAPACITOR CH 50V 100P	1	
C4,C5	ECUX1E104ZFV	C.CAPACITOR CH 25V 0.1U	2	FOR VEP83405A
C6	ECUX1H330JCV	C.CAPACITOR CH 50V 33P	1	FOR VEP83405A
C20-22	ECUX1E104ZFV	C.CAPACITOR CH 25V 0.1U	3	FOR VEP83405A
C23-25	ECEV1CV100Q	E.CAPACITOR CH 16V 10U	3	FOR VEP83405A
C26-28	ECUX1E104ZFV	C.CAPACITOR CH 25V 0.1U	3	FOR VEP83405A
C29,30	ECUX1H102JCV	C.CAPACITOR CH 50V 1000P	2	FOR VEP83405A
C31-33	ECUX1E104ZFV	C.CAPACITOR CH 25V 0.1U	3	FOR VEP83405A
C34	ECEV1EN3R3Q	E.CAPACITOR CH 25V 3.3U	1	FOR VEP83405A
C35	ECUX1E104ZFV	C.CAPACITOR CH 25V 0.1U	1	FOR VEP83405A
C36	ECUX1H102JCV	C.CAPACITOR CH 50V 1000P	1	FOR VEP83405A
C37-39	ECUX1E104ZFV	C.CAPACITOR CH 25V 0.1U	3	FOR VEP83405A
C50,51	ECUX1E104ZFV	C.CAPACITOR CH 25V 0.1U	2	
C51	ECUX1E104ZFV	C.CAPACITOR CH 25V 0.1U	1	FOR VEP83405A
C52	ECEV0JV330Q	E.CAPACITOR CH6.3V 33U	1	
C61	ECUX1E104ZFV	C.CAPACITOR CH 25V 0.1U	1	
C62	ECUX1E104ZFV	C.CAPACITOR CH 25V 0.1U	1	
C63	ECUX1E104ZFV	C.CAPACITOR CH 25V 0.1U	1	
C64	ECUX1E104ZFV	C.CAPACITOR CH 25V 0.1U	1	
C66	ECUX1E104ZFV	C.CAPACITOR CH 25V 0.1U	1	
C67	ECUX1E104ZFV	C.CAPACITOR CH 25V 0.1U	1	
C68	ECUX1E104ZFV	C.CAPACITOR CH 25V 0.1U	1	
C68	ECUX1E104ZFV	C.CAPACITOR CH 25V 0.1U	1	FOR VEP83405A
C69-71	ECEV1CV100Q	E.CAPACITOR CH 16V 10U	3	
C72-87	ECUX1E104ZFV	C.CAPACITOR CH 25V 0.1U	16	
C88-95	ECEV0JV330Q	E.CAPACITOR CH6.3V 33U	8	
C96,97	ECUX1E104ZFV	C.CAPACITOR CH 25V 0.1U	2	
C98	ECEV0JV330Q	E.CAPACITOR CH6.3V 33U	1	
C99,00	ECUX1E104ZFV	C.CAPACITOR CH 25V 0.1U	2	
C101	ECUX1E104ZFV	C.CAPACITOR CH 25V 0.1U	1	
C103	ECUX1E104ZFV	C.CAPACITOR CH 25V 0.1U	1	
C104	ECUX1E104ZFV	C.CAPACITOR CH 25V 0.1U	1	
C105	ECUX1E104ZFV	C.CAPACITOR CH 25V 0.1U	1	
C107	ECUX1E104ZFV	C.CAPACITOR CH 25V 0.1U	1	
C108	ECUX1E104ZFV	C.CAPACITOR CH 25V 0.1U	1	
C109	ECUX1E104ZFV	C.CAPACITOR CH 25V 0.1U	1	
C110	ECUX1E104ZFV	C.CAPACITOR CH 25V 0.1U	1	
C111	ECUX1E104ZFV	C.CAPACITOR CH 25V 0.1U	1	
C112	ECUX1E104ZFV	C.CAPACITOR CH 25V 0.1U	1	
C113	ECUX1E104ZFV	C.CAPACITOR CH 25V 0.1U	1	FOR VEP83405A
C113	ECUX1H103KBV	C.CAPACITOR CH 50V 0.01U	1	
C114	ECUX1E104ZFV	C.CAPACITOR CH 25V 0.1U	1	
C115	ECUX1E104ZFV	C.CAPACITOR CH 25V 0.1U	1	
C116	ECUX1E104ZFV	C.CAPACITOR CH 25V 0.1U	1	
C117	ECUX1E104ZFV	C.CAPACITOR CH 25V 0.1U	1	
C118	ECUX1E104ZFV	C.CAPACITOR CH 25V 0.1U	1	
C120	ECUX1E104ZFV	C.CAPACITOR CH 25V 0.1U	1	FOR VEP83405A
C130-36	ECUX1E104ZFV	C.CAPACITOR CH 25V 0.1U	7	
C170-76	ECUX1E104ZFV	C.CAPACITOR CH 25V 0.1U	7	
C178	ECUX1H103KBV	C.CAPACITOR CH 50V 0.01U	1	
C179-81	ECUX1E104ZFV	C.CAPACITOR CH 25V 0.1U	3	
C182	ECUX1H103KBV	C.CAPACITOR CH 50V 0.01U	1	
C183	ECUX1E104ZFV	C.CAPACITOR CH 25V 0.1U	1	
C184	ECUX1H331JCV	C.CAPACITOR CH 50V 330P	1	
C185	ECEV1CV100Q	E.CAPACITOR CH 16V 10U	1	
C186,87	ECUX1E104ZFV	C.CAPACITOR CH 25V 0.1U	2	
C188	ECEV1CV100Q	E.CAPACITOR CH 16V 10U	1	
C189-92	ECUX1E104ZFV	C.CAPACITOR CH 25V 0.1U	4	
C193	ECUX1H222KBV	C.CAPACITOR CH 50V 2200P	1	
C194	ECEV1EN3R3Q	E.CAPACITOR CH 25V 3.3U	1	
C195	ECUX1H101JCV	C.CAPACITOR CH 50V 100P	1	
C196	ECUX1H470JCV	C.CAPACITOR CH 50V 47P	1	
C197	ECUX1E104ZFV	C.CAPACITOR CH 25V 0.1U	1	
C198	ECEV1EN3R3Q	E.CAPACITOR CH 25V 3.3U	1	
C199	ECEV1CV100Q	E.CAPACITOR CH 16V 10U	1	

Ref.No.	Part No.	Part Name & Description	Pcs	Remarks
C200	ECUX1H102JCV	C.CAPACITOR CH 50V 1000P	1	
C201	ECEV1CV100Q	E.CAPACITOR CH 16V 10U	1	
C202	ECUX1E104ZFV	C.CAPACITOR CH 25V 0.1U	1	
C203	ECUX1H050CCV	C.CAPACITOR CH 50V 5P	1	
C204	ECUX1E104ZFV	C.CAPACITOR CH 25V 0.1U	1	
C205	ECUX1H151JCV	C.CAPACITOR CH 50V 150P	1	
C206	ECUX1H102JCV	C.CAPACITOR CH 50V 1000P	1	
C207	ECUX1H470JCV	C.CAPACITOR CH 50V 47P	1	
C209	ECUX1H050CCV	C.CAPACITOR CH 50V 5P	1	
C210	ECUX1E104ZFV	C.CAPACITOR CH 25V 0.1U	1	
C211	ECUX1H101JCV	C.CAPACITOR CH 50V 100P	1	
C212	VCK0150	C.CAPACITOR	1	
C213,14	ECUX1H101JCV	C.CAPACITOR CH 50V 100P	2	
C215,16	ECUX1E104ZFV	C.CAPACITOR CH 25V 0.1U	2	
C219,20	ECUX1E104ZFV	C.CAPACITOR CH 25V 0.1U	2	
C300-05	ECUX1E104ZFV	C.CAPACITOR CH 25V 0.1U	6	
C306	ECUX1H102JCV	C.CAPACITOR CH 50V 1000P	1	
C307-15	ECUX1E104ZFV	C.CAPACITOR CH 25V 0.1U	9	
C330,31	ECUX1E104ZFV	C.CAPACITOR CH 25V 0.1U	2	
C333-35	ECUX1E104ZFV	C.CAPACITOR CH 25V 0.1U	3	
C336	ECUX1H102JCV	C.CAPACITOR CH 50V 1000P	1	
C337-56	ECUX1E104ZFV	C.CAPACITOR CH 25V 0.1U	20	
C380	ECUX1E104ZFV	C.CAPACITOR CH 25V 0.1U	1	
C381	ECUX1H102JCV	C.CAPACITOR CH 50V 1000P	1	
C382-88	ECUX1E104ZFV	C.CAPACITOR CH 25V 0.1U	7	
C400-03	ECUX1E104ZFV	C.CAPACITOR CH 25V 0.1U	4	
C404	ECUX1H102JCV	C.CAPACITOR CH 50V 1000P	1	
C405	ECUX1H103KBV	C.CAPACITOR CH 50V 0.01U	1	
C406-10	ECUX1E104ZFV	C.CAPACITOR CH 25V 0.1U	5	
C420	ECUX1H102JCV	C.CAPACITOR CH 50V 1000P	1	
C421	ECUX1H103KBV	C.CAPACITOR CH 50V 0.01U	1	
C422	ECUX1E104ZFV	C.CAPACITOR CH 25V 0.1U	1	
C423	ECUX1H100DCV	C.CAPACITOR CH 50V 10P	1	
C424	ECUX1E104ZFV	C.CAPACITOR CH 25V 0.1U	1	
C425	ECUX1H102JCV	C.CAPACITOR CH 50V 1000P	1	
C426	ECUX1E104ZFV	C.CAPACITOR CH 25V 0.1U	1	
C427	ECUX1H180JCV	C.CAPACITOR CH 50V 18P	1	
C428	ECUX1E104ZFV	C.CAPACITOR CH 25V 0.1U	1	
C440	ECUX1E104ZFV	C.CAPACITOR CH 25V 0.1U	1	
C441	ECUX1H102JCV	C.CAPACITOR CH 50V 1000P	1	
C442	ECUX1E104ZFV	C.CAPACITOR CH 25V 0.1U	1	
C443	ECUX1H102JCV	C.CAPACITOR CH 50V 1000P	1	
C444-50	ECUX1E104ZFV	C.CAPACITOR CH 25V 0.1U	7	
C460-65	ECUX1E104ZFV	C.CAPACITOR CH 25V 0.1U	6	
C467-70	ECUX1E104ZFV	C.CAPACITOR CH 25V 0.1U	4	
C471	ECEV0JV330Q	E.CAPACITOR CH6.3V 33U	1	
C472	ECUX1E104ZFV	C.CAPACITOR CH 25V 0.1U	1	
C473	ECUX1H180JCV	C.CAPACITOR CH 50V 18P	1	
C474	ECUX1H682KBV	C.CAPACITOR CH 50V 6800P	1	
C475	ECEV0JV330Q	E.CAPACITOR CH6.3V 33U	1	
C476	ECUX1E104ZFV	C.CAPACITOR CH 25V 0.1U	1	
C477	ECUX1H102JCV	C.CAPACITOR CH 50V 1000P	1	
C478	ECUX1H682KBV	C.CAPACITOR CH 50V 6800P	1	
C479	ECUX1H180JCV	C.CAPACITOR CH 50V 18P	1	
C481	ECEV1CV100Q	E.CAPACITOR CH 16V 10U	1	
C482	ECEV1HV2R2Q	E.CAPACITOR CH 50V 2.2U	1	
C483	ECUX1E104ZFV	C.CAPACITOR CH 25V 0.1U	1	
C484	VCK0151	C.CAPACITOR	1	
C485	ECEV1CV100Q	E.CAPACITOR CH 16V 10U	1	
C486	ECEV1HV2R2Q	E.CAPACITOR CH 50V 2.2U	1	
C487	ECUX1E104ZFV	C.CAPACITOR CH 25V 0.1U	1	
C488	ECEV0JV330Q	E.CAPACITOR CH6.3V 33U	1	
C489,90	ECUX1E104ZFV	C.CAPACITOR CH 25V 0.1U	2	
C491	ECUX1H682KBV	C.CAPACITOR CH 50V 6800P	1	
C492	ECUX1H180JCV	C.CAPACITOR CH 50V 18P	1	
C493-00	ECUX1E104ZFV	C.CAPACITOR CH 25V 0.1U	8	
C510-18	ECUX1E104ZFV	C.CAPACITOR CH 25V 0.1U	9	
C519	ECUX1H102JCV	C.CAPACITOR CH 50V 1000P	1	
C520-23	ECUX1E104ZFV	C.CAPACITOR CH 25V 0.1U	4	
C542-44	ECUX1E104ZFV	C.CAPACITOR CH 25V 0.1U	3	
C549,50	ECUX1E104ZFV	C.CAPACITOR CH 25V 0.1U	2	
C670-74	ECUX1E104ZFV	C.CAPACITOR CH 25V 0.1U	5	
C760-71	ECUX1E104ZFV	C.CAPACITOR CH 25V 0.1U	12	
C780-82	ECUX1E104ZFV	C.CAPACITOR CH 25V 0.1U	3	
C784	ECUX1E104ZFV	C.CAPACITOR CH 25V 0.1U	1	

Ref.No.	Part No.	Part Name & Description	Pcs	Remarks
C800-11	ECUX1E104ZFV	C.CAPACITOR CH 25V 0.1U	12	
C840	ECUX1H102JCV	C.CAPACITOR CH 50V 1000P	1	
C841-44	ECUX1E104ZFV	C.CAPACITOR CH 25V 0.1U	4	
C870	ECUX1H103KBV	C.CAPACITOR CH 50V 0.01U	1	
C871,72	ECUX1E104ZFV	C.CAPACITOR CH 25V 0.1U	2	
C910,11	ECUX1E104ZFV	C.CAPACITOR CH 25V 0.1U	2	
C912	ECUX1H150JCV	C.CAPACITOR CH 50V 15P	1	
C913	ECUX1H120JCV	C.CAPACITOR CH 50V 12P	1	
C914	ECUX1H103KBV	C.CAPACITOR CH 50V 0.01U	1	
C915	ECUX1E104ZFV	C.CAPACITOR CH 25V 0.1U	1	
C916-18	ECUX1H102JCV	C.CAPACITOR CH 50V 1000P	3	
C980-86	ECUX1E104ZFV	C.CAPACITOR CH 25V 0.1U	7	
C987	ECUX1H102JCV	C.CAPACITOR CH 50V 1000P	1	
C1022,23	ECUX1E104ZFV	C.CAPACITOR CH 25V 0.1U	2	
C1026-29	ECUX1E104ZFV	C.CAPACITOR CH 25V 0.1U	4	
C1050-54	ECUX1E104ZFV	C.CAPACITOR CH 25V 0.1U	5	
C1060-65	ECUX1E104ZFV	C.CAPACITOR CH 25V 0.1U	6	
C1110	ECUX1E104ZFV	C.CAPACITOR CH 25V 0.1U	1	
D20,21	MA152WK	DIODE	2	FOR VEP83405A
D60-63	MA701A	DIODE	4	
D170	MA715	DIODE	1	
D171	MA335	DIODE	1	
D172,73	MA152WK	DIODE	2	
FL60-63	VLF0576	FILTER	4	
FL460	VLF1118	FILTER	1	
FL461	VLF1116	FILTER	1	
FL462	VLF1117	FILTER	1	
IC20	NJM78L09UA	IC	1	FOR VEP83405A
IC21	NJM78L05UA	IC	1	FOR VEP83405A
IC22	NJM79L09UA	IC	1	FOR VEP83405A
IC23	MM74HC221AM	IC	1	FOR VEP83405A
IC24	MC74HC125AF	IC	1	FOR VEP83405A
IC25	NJM082BM	IC	1	FOR VEP83405A
IC51	T203E3801AF1	IC	1	FOR VEP83405A
IC52,53	T74VHC244F	IC	2	FOR VEP83405A
IC54,55	TC7S04F	IC	2	FOR VEP83405A
IC56	T74VHC244F	IC	1	FOR VEP83405A
IC61	NJM78L09UA	IC	1	
IC62	NJM79L09UA	IC	1	
IC63	NJM78L05UA	IC	1	
IC65-67	XC62AP3202P	IC	3	
IC68	XC62AP2302PL	IC	1	
IC69-71	XC62AP3202P	IC	3	
IC72	XC62AP2302PL	IC	1	
IC73,74	XC62AP3202P	IC	2	
IC75	74F244SJ	IC	1	
IC101	EPF10K20TC-4	IC	1	FOR VEP83405A
IC101	SN74S1051NS	IC	1	
IC102	CY7C19920ZC	IC	1	FOR VEP83405A
IC102	SN74S1051NS	IC	1	
IC103	74F541SJ	IC	1	
IC103	S80726ANDP	IC	1	FOR VEP83405A
IC104	74F541SJ	IC	1	
IC104	VSI3028A	IC	1	FOR VEP83405A
IC105	CY7C19920ZC	IC	1	FOR VEP83405A
IC105	TC7S04F	IC	1	
IC106	74F245SJ	IC	1	
IC107	74F138SJ	IC	1	
IC108,09	UPD71055GB	IC	2	
IC110	T74VHC244F	IC	1	
IC111	UPD71055GB	IC	1	
IC112	TC7S08F	IC	1	
IC114	74AC139SJ	IC	1	
IC115	74F244SJ	IC	1	
IC116	TC7S04F	IC	1	
IC130	TCVHC153F	IC	1	
IC131	UPD65841G025	IC	1	
IC132,33	T74VHCT244F	IC	2	
IC170	NJM082BM	IC	1	
IC171	NJM319M	IC	1	
IC172	MC74HC125AF	IC	1	
IC173	TC7S66F	IC	1	

Ref.No.	Part No.	Part Name & Description	Pcs	Remarks
IC174,75	NJM082BM	IC	2	
IC176	TC7S04F	IC	1	
IC177	UPC2384GA	IC	1	
IC178	74F244SJ	IC	1	
IC181	74F244SJ	IC	1	
IC184	T74LCX244F	IC	1	
IC185	MC10H124M	IC	1	
IC186-88	T74LCX244F	IC	3	
IC189	XC62AP3202P	IC	1	
IC190	TC7S08F	IC	1	
IC300,01	T74VHC244F	IC	2	
IC302	MN67372A2	IC	1	
IC303	MN4707F	IC	1	
IC304	T74VHC244F	IC	1	
IC330	T74VHC244F	IC	1	
IC331	MC10H125M	IC	1	
IC332	T74LCX244F	IC	1	
IC334	M65401FP	IC	1	
IC335	MN673711	IC	1	
IC336-39	T74VHC245F	IC	4	
IC380	L7A1433	IC	1	
IC381	TC7S66F	IC	1	
IC382	MB81V4260S7	IC	1	
IC400	L7A1434	IC	1	
IC401	MC10H124M	IC	1	
IC402,03	TC7S08F	IC	2	
IC420	L7A1434	IC	1	
IC440	T74VHC08F	IC	1	
IC441	L7A1433	IC	1	
IC442	TC7S66F	IC	1	
IC443	MB81V4260S7	IC	1	
IC461	MN673711	IC	1	
IC462	M65401FP	IC	1	
IC463	M52660FP	IC	1	
IC464	TCVHC257F	IC	1	
IC465	T74VHCT244F	IC	1	
IC466	EPM7128STC15	IC	1	BLANK ROM
ID466	VVVSI3084A		1	SOFTWARE
IC510	MN67372A2	IC	1	
IC511	T74VHC244F	IC	1	
IC512	MN4707F	IC	1	
IC540,41	T74VHC244F	IC	2	
IC544	T74VHC32F	IC	1	
IC545,46	TC4W53F	IC	2	
IC670	T74VHC244F	IC	1	
IC671	T160G70-1601	IC	1	
IC760-63	UPD42280G3	IC	4	
IC764-67	74ALS541SJ	IC	4	
IC780	EPM7128STC15	IC	1	BLANK ROM
ID780	VVVSI3084A		1	SOFTWARE
IC782	T74VHC244F	IC	1	
IC783	D485505G25	IC	1	
IC784	T74VHC244F	IC	1	
IC800	UPD42280G3	IC	1	
IC801	MC10H125M	IC	1	
IC802,03	T74LCX244F	IC	2	
IC804	T74VHC74F	IC	1	
IC805	UPD65843G026	IC	1	
IC840	UPD65868D022	IC	1	
IC870	VSI2705	IC	1	
IC871	T74VHC08F	IC	1	
IC910	VSI2705	IC	1	
IC911	T74VHC08F	IC	1	
IC912	T74VHCU04F	IC	1	
IC913	S80727ANDQ	IC	1	
IC980	T74VHC244F	IC	1	
IC981-83	TCVHC257F	IC	3	
IC984,85	T74VHCT244F	IC	2	
IC986	T74VHC74F	IC	1	
IC1021	UPD42280G3	IC	1	
IC1050,51	T74VHC244F	IC	2	
IC1052	TC7S04F	IC	1	
IC1053,54	T74VHC244F	IC	2	
IC1110	T74VHC244F	IC	1	

Ref.No.	Part No.	Part Name & Description	Pcs	Remarks
IS104	VJS3109	CONNECTOR (FEMALE)	1	FOR VEP83405A
L60-62	VLP0133	COIL	3	
L170-72	VLQ0319K470	COIL 47UH	3	
L174	VLQ0319M1R5	COIL 1.5UH	1	
L175	VLQ0163J3R9	COIL 3.9UH	1	
L176	VLQ0319K470	COIL 47UH	1	
L420	VLQ0163J1R5	COIL 1.5UH	1	
L460-62	VLQ0319K100	COIL 10UH	3	
P1	VJP3454B096	CONNECTOR (MALE)	1	
P1	VJS4064N160	CONNECTOR	1	FOR VEP83405A
P2	VJP3454B096	CONNECTOR (MALE)	1	
P60	VJP1246T	CONNECTOR (MALE) 6P	1	
P1050	VJP3418B060	CONNECTOR (MALE)	1	
P1060	VJP4064N160C	CONNECTOR (MALE)	1	
Q170	2SC2295-C	TRANSISTOR	1	
R1	ERJ3GEY0R00	M.RESISTOR CH 1/16W 0	1	FOR VEP83405A
R1	ERJ3GEYJ470	M.RESISTOR CH 1/16W 47	1	
R2	ERJ3GEY0R00	M.RESISTOR CH 1/16W 0	1	FOR VEP83405A
R2	ERJ3GEYJ470	M.RESISTOR CH 1/16W 47	1	
R3	ERJ3GEY0R00	M.RESISTOR CH 1/16W 0	1	FOR VEP83405A
R3-19	ERJ3GEYJ470	M.RESISTOR CH 1/16W 47	17	
R20	ERJ3GEYJ473	M.RESISTOR CH 1/16W 47K	1	FOR VEP83405A
R21	ERJ3GEYJ273	M.RESISTOR CH 1/16W 27K	1	FOR VEP83405A
R21	ERJ3GEYJ470	M.RESISTOR CH 1/16W 47	1	
R22	ERJ3GEYG471	M.RESISTOR CH 1/16W 470	1	FOR VEP83405A
R22	ERJ3GEYJ470	M.RESISTOR CH 1/16W 47	1	
R23	ERJ3GEYJ103	M.RESISTOR CH 1/16W 10K	1	FOR VEP83405A
R23	ERJ3GEYJ470	M.RESISTOR CH 1/16W 47	1	
R24	ERJ3GEYJ103	M.RESISTOR CH 1/16W 10K	1	FOR VEP83405A
R24	ERJ3GEYJ470	M.RESISTOR CH 1/16W 47	1	
R25	ERJ3GEYJ153	M.RESISTOR CH 1/16W 15K	1	FOR VEP83405A
R25	ERJ3GEYJ470	M.RESISTOR CH 1/16W 47	1	
R26	ERJ3GEYJ223	M.RESISTOR CH 1/16W 22K	1	FOR VEP83405A
R26	ERJ3GEYJ470	M.RESISTOR CH 1/16W 47	1	
R27	ERJ3GEYJ105	M.RESISTOR CH 1/16W 1M	1	FOR VEP83405A
R27	ERJ3GEYJ470	M.RESISTOR CH 1/16W 47	1	
R28	ERJ3GEYG102	M.RESISTOR CH 1/16W 1K	1	FOR VEP83405A
R28-46	ERJ3GEYJ470	M.RESISTOR CH 1/16W 47	19	
R47	ERJ3GEY0R00	M.RESISTOR CH 1/16W 0	1	
R48-53	ERJ3GEYJ470	M.RESISTOR CH 1/16W 47	6	
R54	ERJ3GEY0R00	M.RESISTOR CH 1/16W 0	1	FOR VEP83405A
R54	ERJ3GEYJ470	M.RESISTOR CH 1/16W 47	1	
R55	ERJ3GEY0R00	M.RESISTOR CH 1/16W 0	1	FOR VEP83405A
R64,65	ERJ3GEY0R00	M.RESISTOR CH 1/16W 0	2	
R67-02	ERJ3GEY0R00	M.RESISTOR CH 1/16W 0	12	FOR VEP83405A
R78	ERJ3GEYG102	M.RESISTOR CH 1/16W 1K	1	
R79,02	ERJ3GEY0R00	M.RESISTOR CH 1/16W 0	2	FOR VEP83405A
R80	ERJ3GEYG102	M.RESISTOR CH 1/16W 1K	1	
R81	ERJ3GEY0R00	M.RESISTOR CH 1/16W 0	1	FOR VEP83405A
R81	ERJ3GEYG102	M.RESISTOR CH 1/16W 1K	1	
R82-02	ERJ3GEY0R00	M.RESISTOR CH 1/16W 0	3	FOR VEP83405A
R84,85	ERJ3GEYG102	M.RESISTOR CH 1/16W 1K	2	
R87	ERJ3GEY0R00	M.RESISTOR CH 1/16W 0	1	
R92-95	ERJ3GEYG102	M.RESISTOR CH 1/16W 1K	4	FOR VEP83405A
R96	ERJ3GEY0R00	M.RESISTOR CH 1/16W 0	1	FOR VEP83405A
R98	ERJ3GEY0R00	M.RESISTOR CH 1/16W 0	1	FOR VEP83405A
R101	ERJ3GEY0R00	M.RESISTOR CH 1/16W 0	1	
R102	ERJ3GEYG102	M.RESISTOR CH 1/16W 1K	1	FOR VEP83405A
R102	ERJ3GEYJ103	M.RESISTOR CH 1/16W 10K	1	
R103	ERJ3GEYG102	M.RESISTOR CH 1/16W 1K	1	FOR VEP83405A
R103	ERJ3GEYJ103	M.RESISTOR CH 1/16W 10K	1	
R104	ERJ3GEY0R00	M.RESISTOR CH 1/16W 0	1	
R105	ERJ3GEYG102	M.RESISTOR CH 1/16W 1K	1	
R106	ERJ3GEYJ101	M.RESISTOR CH 1/16W 100	1	
R106	ERJ3GEYJ103	M.RESISTOR CH 1/16W 10K	1	FOR VEP83405A
R107	ERJ3GEYJ101	M.RESISTOR CH 1/16W 100	1	
R107	ERJ3GEYJ103	M.RESISTOR CH 1/16W 10K	1	FOR VEP83405A
R108	ERJ3GEY0R00	M.RESISTOR CH 1/16W 0	1	FOR VEP83405A
R108	ERJ3GEYJ272	M.RESISTOR CH 1/16W 2.7K	1	
R109	ERJ3GEYJ103	M.RESISTOR CH 1/16W 10K	1	FOR VEP83405A
R109	ERJ3GEYJ272	M.RESISTOR CH 1/16W 2.7K	1	

Ref.No.	Part No.	Part Name & Description	Pcs	Remarks
R110	ERJ3GEYJ103	M.RESISTOR CH 1/16W 10K	1	FOR VEP83405A
R110	ERJ3GEYJ272	M.RESISTOR CH 1/16W 2.7K	1	
R111	ERJ3GEYJ103	M.RESISTOR CH 1/16W 10K	1	FOR VEP83405A
R111-13	ERJ3GEYJ272	M.RESISTOR CH 1/16W 2.7K	3	
R114	ERJ3GEYJ101	M.RESISTOR CH 1/16W 100	1	FOR VEP83405A
R114	ERJ3GEYJ272	M.RESISTOR CH 1/16W 2.7K	1	
R115	ERJ3GEY0R00	M.RESISTOR CH 1/16W 0	1	FOR VEP83405A
R115	ERJ3GEYJ272	M.RESISTOR CH 1/16W 2.7K	1	
R116	ERJ3GEY0R00	M.RESISTOR CH 1/16W 0	1	FOR VEP83405A
R116	ERJ3GEYJ103	M.RESISTOR CH 1/16W 10K	1	
R117	ERJ3GEYG102	M.RESISTOR CH 1/16W 1K	1	FOR VEP83405A
R117	ERJ3GEYJ103	M.RESISTOR CH 1/16W 10K	1	
R118	ERJ3GEYG102	M.RESISTOR CH 1/16W 1K	1	FOR VEP83405A
R118	ERJ3GEYJ103	M.RESISTOR CH 1/16W 10K	1	
R119	ERJ3GEYG102	M.RESISTOR CH 1/16W 1K	1	FOR VEP83405A
R119	ERJ3GEYJ103	M.RESISTOR CH 1/16W 10K	1	
R120,21	ERJ3GEYG102	M.RESISTOR CH 1/16W 1K	2	
R122	ERJ3GEYG102	M.RESISTOR CH 1/16W 1K	1	FOR VEP83405A
R122	ERJ3GEYJ103	M.RESISTOR CH 1/16W 10K	1	
R123	ERJ3GEY0R00	M.RESISTOR CH 1/16W 0	1	
R124	ERJ3GEYJ101	M.RESISTOR CH 1/16W 100	1	
R127	ERJ3GEYJ103	M.RESISTOR CH 1/16W 10K	1	
R128	ERJ3GEYJ103	M.RESISTOR CH 1/16W 10K	1	
R128	ERJ3GEYJ103	M.RESISTOR CH 1/16W 10K	1	FOR VEP83405A
R132-35	ERJ3GEYJ103	M.RESISTOR CH 1/16W 10K	4	
R136	ERJ3GEY0R00	M.RESISTOR CH 1/16W 0	1	
R137-40	ERJ3GEYJ103	M.RESISTOR CH 1/16W 10K	4	
R144	ERJ3GEYJ101	M.RESISTOR CH 1/16W 100	1	
R145	ERJ3GEY0R00	M.RESISTOR CH 1/16W 0	1	
R147	ERJ3GEYJ103	M.RESISTOR CH 1/16W 10K	1	
R149	ERJ3GEY0R00	M.RESISTOR CH 1/16W 0	1	
R151	ERJ3GEY0R00	M.RESISTOR CH 1/16W 0	1	
R152,53	ERJ3GEYJ101	M.RESISTOR CH 1/16W 100	2	
R154-61	ERJ3GEYG472	M.RESISTOR CH 1/16W 4.7K	8	
R170,71	ERJ3GEY0R00	M.RESISTOR CH 1/16W 0	2	
R172	ERJ3GEYJ473	M.RESISTOR CH 1/16W 47K	1	
R173	ERJ3GEYG471	M.RESISTOR CH 1/16W 470	1	
R174	ERJ3GEYJ222	M.RESISTOR CH 1/16W 2.2K	1	
R175	ERJ3GEYG472	M.RESISTOR CH 1/16W 4.7K	1	
R176	ERJ3GEYJ123	M.RESISTOR CH 1/16W 12K	1	
R177,78	ERJ3GEYJ103	M.RESISTOR CH 1/16W 10K	2	
R179	ERJ3GEYG472	M.RESISTOR CH 1/16W 4.7K	1	
R180	ERJ3GEYJ222	M.RESISTOR CH 1/16W 2.2K	1	
R181	ERJ3GEYJ473	M.RESISTOR CH 1/16W 47K	1	
R182	ERJ3GEYJ273	M.RESISTOR CH 1/16W 27K	1	
R183	ERJ3GEYJ105	M.RESISTOR CH 1/16W 1M	1	
R184,85	ERJ3GEYJ103	M.RESISTOR CH 1/16W 10K	2	
R186	ERJ3GEYG102	M.RESISTOR CH 1/16W 1K	1	
R187	ERJ3GEY0R00	M.RESISTOR CH 1/16W 0	1	
R188	ERJ3GEYG102	M.RESISTOR CH 1/16W 1K	1	
R189	ERJ3GEYJ223	M.RESISTOR CH 1/16W 22K	1	
R190	ERJ3GEYJ105	M.RESISTOR CH 1/16W 1M	1	
R191,92	ERJ3GEYG102	M.RESISTOR CH 1/16W 1K	2	
R193	ERJ3GEYG472	M.RESISTOR CH 1/16W 4.7K	1	
R194,95	ERJ3GEY0R00	M.RESISTOR CH 1/16W 0	2	
R196	ERJ3GEYG102	M.RESISTOR CH 1/16W 1K	1	
R197	ERJ3GEYJ103	M.RESISTOR CH 1/16W 10K	1	
R198	ERJ3GEYG102	M.RESISTOR CH 1/16W 1K	1	
R199	ERJ3GEYJ103	M.RESISTOR CH 1/16W 10K	1	
R200	ERJ3GEY0R00	M.RESISTOR CH 1/16W 0	1	FOR VEP83405A
R200	ERJ3GEYJ221	M.RESISTOR CH 1/16W 220	1	
R201	ERJ3GEY0R00	M.RESISTOR CH 1/16W 0	1	FOR VEP83405A
R201,02	ERJ3GEYJ101	M.RESISTOR CH 1/16W 100	2	FOR VEP83405A
R202	ERJ3GEYJ103	M.RESISTOR CH 1/16W 10K	1	
R203	ERJ3GEYJ223	M.RESISTOR CH 1/16W 22K	1	
R204	ERJ3GEYJ105	M.RESISTOR CH 1/16W 1M	1	
R205	ERJ3GEYJ331	M.RESISTOR CH 1/16W 330	1	
R206	ERJ3GEYJ272	M.RESISTOR CH 1/16W 2.7K	1	
R207,08	ERJ3GEYG102	M.RESISTOR CH 1/16W 1K	2	
R209,10	ERJ3GEY0R00	M.RESISTOR CH 1/16W 0	2	
R211,12	ERJ3GEYJ101	M.RESISTOR CH 1/16W 100	2	
R213	ERJ3GEYJ101	M.RESISTOR CH 1/16W 100	1	
R216-22	ERJ3GEYJ470	M.RESISTOR CH 1/16W 47	7	
R223	ERJ3GEY0R00	M.RESISTOR CH 1/16W 0	1	
R228-35	ERJ3GEYJ470	M.RESISTOR CH 1/16W 47	8	

Ref.No.	Part No.	Part Name & Description	Pcs	Remarks
R236-39	ERJ3GEYJ101	M.RESISTOR CH 1/16W 100	4	
R240	ERJ3GEY0R00	M.RESISTOR CH 1/16W 0	1	
R241	ERJ3GEYG471	M.RESISTOR CH 1/16W 470	1	
R242	ERJ3GEY0R00	M.RESISTOR CH 1/16W 0	1	
R243	ERJ3GEYG471	M.RESISTOR CH 1/16W 470	1	
R244	ERJ3GEY0R00	M.RESISTOR CH 1/16W 0	1	
R245	ERJ3GEYJ221	M.RESISTOR CH 1/16W 220	1	
R246	ERJ3GEY0R00	M.RESISTOR CH 1/16W 0	1	
R247	ERJ3GEYJ221	M.RESISTOR CH 1/16W 220	1	
R248	ERJ3GEY0R00	M.RESISTOR CH 1/16W 0	1	
R249	ERJ3GEYG471	M.RESISTOR CH 1/16W 470	1	
R250	ERJ3GEY0R00	M.RESISTOR CH 1/16W 0	1	
R251	ERJ3GEYG471	M.RESISTOR CH 1/16W 470	1	
R252	ERJ3GEY0R00	M.RESISTOR CH 1/16W 0	1	
R253	ERJ3GEYG471	M.RESISTOR CH 1/16W 470	1	
R254	ERJ3GEY0R00	M.RESISTOR CH 1/16W 0	1	
R255	ERJ3GEYG471	M.RESISTOR CH 1/16W 470	1	
R256-58	ERJ3GEYJ470	M.RESISTOR CH 1/16W 47	3	
R260,61	ERJ3GEYJ470	M.RESISTOR CH 1/16W 47	2	
R264-67	ERJ3GEYJ470	M.RESISTOR CH 1/16W 47	4	
R272-87	ERJ3GEYJ470	M.RESISTOR CH 1/16W 47	16	
R288	ERJ3GEY0R00	M.RESISTOR CH 1/16W 0	1	
R290	ERJ3GEYJ103	M.RESISTOR CH 1/16W 10K	1	
R291	ERJ3GEY0R00	M.RESISTOR CH 1/16W 0	1	
R293	ERJ3GEYJ103	M.RESISTOR CH 1/16W 10K	1	
R300-15	ERJ3GEYJ103	M.RESISTOR CH 1/16W 10K	16	
R316,17	ERJ3GEYJ101	M.RESISTOR CH 1/16W 100	2	
R318,19	ERJ3GEY0R00	M.RESISTOR CH 1/16W 0	2	
R320	ERJ3GEYJ101	M.RESISTOR CH 1/16W 100	1	
R330,31	ERJ3GEYJ101	M.RESISTOR CH 1/16W 100	2	
R333-36	ERJ3GEYJ103	M.RESISTOR CH 1/16W 10K	4	
R337,38	ERJ3GEYJ470	M.RESISTOR CH 1/16W 47	2	
R340,41	ERJ3GEYJ101	M.RESISTOR CH 1/16W 100	2	
R342	ERJ3GEY0R00	M.RESISTOR CH 1/16W 0	1	
R344-48	ERJ3GEYJ470	M.RESISTOR CH 1/16W 47	5	
R351	ERJ3GEYJ103	M.RESISTOR CH 1/16W 10K	1	
R353-61	ERJ3GEYG472	M.RESISTOR CH 1/16W 4.7K	9	
R362-65	ERJ3GEYJ103	M.RESISTOR CH 1/16W 10K	4	
R366-74	ERJ3GEYJ273	M.RESISTOR CH 1/16W 27K	9	
R380	ERJ3GEYJ223	M.RESISTOR CH 1/16W 22K	1	
R400	ERJ3GEYJ103	M.RESISTOR CH 1/16W 10K	1	
R401	ERJ3GEY0R00	M.RESISTOR CH 1/16W 0	1	
R402	ERJ3GEYG471	M.RESISTOR CH 1/16W 470	1	
R403	ERJ3GEY0R00	M.RESISTOR CH 1/16W 0	1	
R404	ERJ3GEYG471	M.RESISTOR CH 1/16W 470	1	
R407	ERJ3GEY0R00	M.RESISTOR CH 1/16W 0	1	
R408	ERJ3GEYG471	M.RESISTOR CH 1/16W 470	1	
R409	ERJ3GEY0R00	M.RESISTOR CH 1/16W 0	1	
R410	ERJ3GEYG471	M.RESISTOR CH 1/16W 470	1	
R420	ERJ3GEYJ103	M.RESISTOR CH 1/16W 10K	1	
R421	ERJ3GEYJ470	M.RESISTOR CH 1/16W 47	1	
R422	ERJ3GEYJ105	M.RESISTOR CH 1/16W 1M	1	
R440,41	ERJ3GEY0R00	M.RESISTOR CH 1/16W 0	2	
R442	ERJ3GEYG102	M.RESISTOR CH 1/16W 1K	1	
R443	ERJ3GEYJ223	M.RESISTOR CH 1/16W 22K	1	
R444-53	ERJ3GEYJ273	M.RESISTOR CH 1/16W 27K	10	
R462	ERJ3GEY0R00	M.RESISTOR CH 1/16W 0	1	
R464-66	ERJ3GEYJ103	M.RESISTOR CH 1/16W 10K	3	
R469	ERJ3GEYJ391	M.RESISTOR CH 1/16W 390	1	
R470	ERJ3GEYJ681	M.RESISTOR CH 1/16W 680	1	
R471	ERJ3GEYJ391	M.RESISTOR CH 1/16W 390	1	
R472	ERJ3GEY0R00	M.RESISTOR CH 1/16W 0	1	
R473	ERJ3GEYJ681	M.RESISTOR CH 1/16W 680	1	
R476	ERJ3GEYJ103	M.RESISTOR CH 1/16W 10K	1	
R477	ERJ3GEYJ393	M.RESISTOR CH 1/16W 39K	1	
R478	ERJ3GEYJ222	M.RESISTOR CH 1/16W 2.2K	1	
R480	ERJ3GEYJ101	M.RESISTOR CH 1/16W 100	1	
R481	ERJ3GEYJ103	M.RESISTOR CH 1/16W 10K	1	
R483	ERJ3GEYJ681	M.RESISTOR CH 1/16W 680	1	
R484	ERJ3GEYJ391	M.RESISTOR CH 1/16W 390	1	
R487	ERJ3GEYJ470	M.RESISTOR CH 1/16W 47	1	
R488	ERJ3GEYJ101	M.RESISTOR CH 1/16W 100	1	
R489-94	ERJ3GEYG472	M.RESISTOR CH 1/16W 4.7K	6	
R497	ERJ3GEYG102	M.RESISTOR CH 1/16W 1K	1	
R510	ERJ3GEYJ101	M.RESISTOR CH 1/16W 100	1	

Ref.No.	Part No.	Part Name & Description	Pcs	Remarks
R540,41	ERJ3GEY0R00	M.RESISTOR CH 1/16W 0	2	
R543	ERJ3GEYJ101	M.RESISTOR CH 1/16W 100	1	
R544	ERJ3GEY0R00	M.RESISTOR CH 1/16W 0	1	
R555	ERJ3GEYJ101	M.RESISTOR CH 1/16W 100	1	
R557	ERJ3GEY0R00	M.RESISTOR CH 1/16W 0	1	
R654	ERJ3GEY0R00	M.RESISTOR CH 1/16W 0	1	
R670-72	ERJ3GEYJ103	M.RESISTOR CH 1/16W 10K	3	
R673,74	ERJ3GEY0R00	M.RESISTOR CH 1/16W 0	2	
R675	ERJ3GEYJ101	M.RESISTOR CH 1/16W 100	1	
R676-91	ERJ3GEY0R00	M.RESISTOR CH 1/16W 0	16	
R713	ERJ3GEYG102	M.RESISTOR CH 1/16W 1K	1	
R715	ERJ3GEY0R00	M.RESISTOR CH 1/16W 0	1	
R760	ERJ3GEYJ101	M.RESISTOR CH 1/16W 100	1	
R765	ERJ3GEYJ101	M.RESISTOR CH 1/16W 100	1	
R766	ERJ3GEY0R00	M.RESISTOR CH 1/16W 0	1	
R781,82	ERJ3GEYJ103	M.RESISTOR CH 1/16W 10K	2	
R784	ERJ3GEYJ101	M.RESISTOR CH 1/16W 100	1	
R800-03	ERJ3GEYJ101	M.RESISTOR CH 1/16W 100	4	
R804	ERJ3GEY0R00	M.RESISTOR CH 1/16W 0	1	
R806-08	ERJ3GEYJ101	M.RESISTOR CH 1/16W 100	3	
R811,12	ERJ3GEY0R00	M.RESISTOR CH 1/16W 0	2	
R815	ERJ3GEY0R00	M.RESISTOR CH 1/16W 0	1	
R819	ERJ3GEY0R00	M.RESISTOR CH 1/16W 0	1	
R821	ERJ3GEY0R00	M.RESISTOR CH 1/16W 0	1	
R826	ERJ3GEY0R00	M.RESISTOR CH 1/16W 0	1	
R827	ERJ3GEYG102	M.RESISTOR CH 1/16W 1K	1	
R828	ERJ3GEYJ103	M.RESISTOR CH 1/16W 10K	1	
R840-48	ERJ3GEYJ470	M.RESISTOR CH 1/16W 47	9	
R849-54	ERJ3GEYJ103	M.RESISTOR CH 1/16W 10K	6	
R855	ERJ3GEYG102	M.RESISTOR CH 1/16W 1K	1	
R856-59	ERJ3GEYJ103	M.RESISTOR CH 1/16W 10K	4	
R860-64	ERJ3GEYJ470	M.RESISTOR CH 1/16W 47	5	
R870	ERJ3GEYJ473	M.RESISTOR CH 1/16W 47K	1	
R871	ERJ3GEYG102	M.RESISTOR CH 1/16W 1K	1	
R873,74	ERJ3GEY0R00	M.RESISTOR CH 1/16W 0	2	
R876,77	ERJ3GEYJ222	M.RESISTOR CH 1/16W 2.2K	2	
R878,79	ERJ3GEYJ101	M.RESISTOR CH 1/16W 100	2	
R880	ERJ3GEYG102	M.RESISTOR CH 1/16W 1K	1	
R882	ERJ3GEYG102	M.RESISTOR CH 1/16W 1K	1	
R883	ERJ3GEYJ103	M.RESISTOR CH 1/16W 10K	1	
R886	ERJ3GEYJ103	M.RESISTOR CH 1/16W 10K	1	
R887,88	ERJ3GEYG472	M.RESISTOR CH 1/16W 4.7K	2	
R889-96	ERJ3GEYG102	M.RESISTOR CH 1/16W 1K	8	
R897	ERJ3GEYJ104	M.RESISTOR CH 1/16W 100K	1	
R898	ERJ3GEY0R00	M.RESISTOR CH 1/16W 0	1	
R899	ERJ3GEYJ104	M.RESISTOR CH 1/16W 100K	1	
R900	ERJ3GEY0R00	M.RESISTOR CH 1/16W 0	1	
R901	ERJ3GEYJ104	M.RESISTOR CH 1/16W 100K	1	
R910	ERJ3GEYJ473	M.RESISTOR CH 1/16W 47K	1	
R911	ERJ3GEYG102	M.RESISTOR CH 1/16W 1K	1	
R912	ERJ3GEYJ473	M.RESISTOR CH 1/16W 47K	1	
R913	ERJ3GEYJ103	M.RESISTOR CH 1/16W 10K	1	
R915,16	ERJ3GEY0R00	M.RESISTOR CH 1/16W 0	2	
R918	ERJ3GEY0R00	M.RESISTOR CH 1/16W 0	1	
R919	ERJ3GEYJ105	M.RESISTOR CH 1/16W 1M	1	
R920	ERJ3GEYJ271	M.RESISTOR CH 1/16W 270	1	
R921	ERJ3GEYJ473	M.RESISTOR CH 1/16W 47K	1	
R922	ERJ3GEYJ103	M.RESISTOR CH 1/16W 10K	1	
R923,24	ERJ3GEYG102	M.RESISTOR CH 1/16W 1K	2	
R926,27	ERJ3GEY0R00	M.RESISTOR CH 1/16W 0	2	
R928	ERJ3GEYJ222	M.RESISTOR CH 1/16W 2.2K	1	
R930	ERJ3GEYJ222	M.RESISTOR CH 1/16W 2.2K	1	
R934,35	ERJ3GEYJ101	M.RESISTOR CH 1/16W 100	2	
R937	ERJ3GEY0R00	M.RESISTOR CH 1/16W 0	1	
R938-40	ERJ3GEYG102	M.RESISTOR CH 1/16W 1K	3	
R941,42	ERJ3GEYG472	M.RESISTOR CH 1/16W 4.7K	2	
R943,44	ERJ3GEY0R00	M.RESISTOR CH 1/16W 0	2	
R945	ERJ3GEYJ103	M.RESISTOR CH 1/16W 10K	1	
R946	ERJ3GEYG472	M.RESISTOR CH 1/16W 4.7K	1	
R947	ERJ3GEYG102	M.RESISTOR CH 1/16W 1K	1	
R948	ERJ3GEYJ103	M.RESISTOR CH 1/16W 10K	1	
R949,50	ERJ3GEY0R00	M.RESISTOR CH 1/16W 0	2	
R951-53	ERJ3GEYG102	M.RESISTOR CH 1/16W 1K	3	
R954	ERJ3GEY0R00	M.RESISTOR CH 1/16W 0	1	
R955,56	ERJ3GEYG102	M.RESISTOR CH 1/16W 1K	2	

Ref.No.	Part No.	Part Name & Description	Pcs	Remarks
R957	ERJ3GEYJ101	M.RESISTOR CH 1/16W 100	1	
R958	ERJ3GEYG102	M.RESISTOR CH 1/16W 1K	1	
R959	ERJ3GEYJ101	M.RESISTOR CH 1/16W 100	1	
R960	ERJ3GEYJ473	M.RESISTOR CH 1/16W 47K	1	
R961	ERJ3GEY0R00	M.RESISTOR CH 1/16W 0	1	
R962	ERJ3GEYJ104	M.RESISTOR CH 1/16W 100K	1	
R963	ERJ3GEY0R00	M.RESISTOR CH 1/16W 0	1	
R964	ERJ3GEYJ104	M.RESISTOR CH 1/16W 100K	1	
R965	ERJ3GEY0R00	M.RESISTOR CH 1/16W 0	1	
R966	ERJ3GEYJ104	M.RESISTOR CH 1/16W 100K	1	
R967	ERJ3GEY0R00	M.RESISTOR CH 1/16W 0	1	
R980-87	ERJ3GEYJ103	M.RESISTOR CH 1/16W 10K	8	
R988-93	ERJ3GEYJ101	M.RESISTOR CH 1/16W 100	6	
R994-07	ERJ3GEYG472	M.RESISTOR CH 1/16W 4.7K	14	
R1009	ERJ3GEYG472	M.RESISTOR CH 1/16W 4.7K	1	
R1020,21	ERJ3GEY0R00	M.RESISTOR CH 1/16W 0	2	
R1023-27	ERJ3GEY0R00	M.RESISTOR CH 1/16W 0	5	
R1029-36	ERJ3GEY0R00	M.RESISTOR CH 1/16W 0	8	
R1040	ERJ3GEYJ101	M.RESISTOR CH 1/16W 100	1	
R1041-48	ERJ3GEY0R00	M.RESISTOR CH 1/16W 0	8	
R1050	ERJ3GEYJ331	M.RESISTOR CH 1/16W 330	1	
R1051	ERJ3GEYJ103	M.RESISTOR CH 1/16W 10K	1	
R1060	ERJ3GEYJ103	M.RESISTOR CH 1/16W 10K	1	
R1111	ERJ3GEYJ103	M.RESISTOR CH 1/16W 10K	1	
R1112	ERJ3GEYG102	M.RESISTOR CH 1/16W 1K	1	
R1115	ERJ3GEY0R00	M.RESISTOR CH 1/16W 0	1	
R1150	ERJ3GEY0R00	M.RESISTOR CH 1/16W 0	1	
SW100	VSS0342	SWITCH	1	
SW330	VSS0367-02B	SWITCH	1	
SW331	VSS0367-08B	SWITCH	1	
TG1-G3	EYF6CU	TEST POINT	3	
TG13-15	EYF6CU	TEST POINT	3	FOR VEP83405A
TG171	VJR0646	TEST POINT	1	
TG462	VJR0646	TEST POINT	1	
TG910	EYF6CU	TEST POINT	1	
TP1-12	EYF6CU	TEST POINT	12	FOR VEP83405A
TP20-22	EYF6CU	TEST POINT	3	FOR VEP83405A
TP50,51	EYF6CU	TEST POINT	2	FOR VEP83405A
TP130,31	EYF6CU	TEST POINT	2	
TP170	VJR0646	TEST POINT	1	
TP300,01	EYF6CU	TEST POINT	2	
TP303,04	EYF6CU	TEST POINT	2	
TP400	EYF6CU	TEST POINT	1	
TP421	EYF6CU	TEST POINT	1	
TP440,41	EYF6CU	TEST POINT	2	
TP460	VJR0646	TEST POINT	1	
TP510	EYF6CU	TEST POINT	1	
TP870,71	EYF6CU	TEST POINT	2	
TP911,12	EYF6CU	TEST POINT	2	
VC170	ECV1ZW50X53T	TRIMMER	1	
VR460-62	EVMEGSA00B24	V.RESISTOR 20K	3	
X20	VSX0975	CRYSTAL OSCILLATOR	1	FOR VEP83405A
X420	VSX0645	CRYSTAL OSCILLATOR	1	
X910	VSX0637	CRYSTAL OSCILLATOR	1	
		MISCELLANEOUS		
	VML2143	CARD PULLER	1	
	VML2144	CARD PULLER	1	
	VMX2020	P.C.BOARD POST	4	FOR VEP83405A
	XYN3+K6	SCREW	8	FOR VEP83405A

Ref.No.	Part No.	Part Name & Description	Pcs	Remarks

Ref.No.	Part No.	Part Name & Description	Pcs	Remarks
■ E5	VEP83394B	F5 REC PB P.C.BOARD	1	(RTL)FOR AJ-D850E
■	VEP83405B	V BLK SUB P.C.BOARD	1	(RTL)FOR VEP83394B
C1	ECUX1E104ZFV	C.CAPACITOR CH 25V 0.1U	1	FOR VEP83405B
C1	ECUX1H101JCV	C.CAPACITOR CH 50V 100P	1	
C2	ECUX1E104ZFV	C.CAPACITOR CH 25V 0.1U	1	FOR VEP83405B
C2	ECUX1H101JCV	C.CAPACITOR CH 50V 100P	1	
C3	ECUX1E104ZFV	C.CAPACITOR CH 25V 0.1U	1	FOR VEP83405B
C3	ECUX1H101JCV	C.CAPACITOR CH 50V 100P	1	
C4,C5	ECUX1E104ZFV	C.CAPACITOR CH 25V 0.1U	2	FOR VEP83405B
C6	ECUX1H330JCV	C.CAPACITOR CH 50V 33P	1	FOR VEP83405B
C20-22	ECUX1E104ZFV	C.CAPACITOR CH 25V 0.1U	3	FOR VEP83405B
C23-25	ECEV1CV100Q	E.CAPACITOR CH 16V 10U	3	FOR VEP83405B
C26-28	ECUX1E104ZFV	C.CAPACITOR CH 25V 0.1U	3	FOR VEP83405B
C29,30	ECUX1H102JCV	C.CAPACITOR CH 50V 1000P	2	FOR VEP83405B
C31-33	ECUX1E104ZFV	C.CAPACITOR CH 25V 0.1U	3	FOR VEP83405B
C34	ECEV1EN3R3Q	E.CAPACITOR CH 25V 3.3U	1	FOR VEP83405BFOR VEP83405
C35	ECUX1E104ZFV	C.CAPACITOR CH 25V 0.1U	1	FOR VEP83405B
C36	ECUX1H102JCV	C.CAPACITOR CH 50V 1000P	1	FOR VEP83405B
C37-39	ECUX1E104ZFV	C.CAPACITOR CH 25V 0.1U	3	FOR VEP83405B
C50	ECUX1E104ZFV	C.CAPACITOR CH 25V 0.1U	1	
C51	ECUX1E104ZFV	C.CAPACITOR CH 25V 0.1U	1	FOR VEP83405B
C51	ECUX1E104ZFV	C.CAPACITOR CH 25V 0.1U	1	
C52	ECEV0JV330Q	E.CAPACITOR CH6.3V 33U	1	
C61	ECUX1E104ZFV	C.CAPACITOR CH 25V 0.1U	1	
C62	ECUX1E104ZFV	C.CAPACITOR CH 25V 0.1U	1	
C63	ECUX1E104ZFV	C.CAPACITOR CH 25V 0.1U	1	
C64	ECUX1E104ZFV	C.CAPACITOR CH 25V 0.1U	1	
C66	ECUX1E104ZFV	C.CAPACITOR CH 25V 0.1U	1	
C67	ECUX1E104ZFV	C.CAPACITOR CH 25V 0.1U	1	
C68	ECUX1E104ZFV	C.CAPACITOR CH 25V 0.1U	1	
C68	ECUX1E104ZFV	C.CAPACITOR CH 25V 0.1U	1	FOR VEP83405B
C69-71	ECEV1CV100Q	E.CAPACITOR CH 16V 10U	3	
C72-87	ECUX1E104ZFV	C.CAPACITOR CH 25V 0.1U	16	
C88-95	ECEV0JV330Q	E.CAPACITOR CH6.3V 33U	8	
C96-00	ECUX1E104ZFV	C.CAPACITOR CH 25V 0.1U	5	
C101	ECUX1E104ZFV	C.CAPACITOR CH 25V 0.1U	1	
C103	ECUX1E104ZFV	C.CAPACITOR CH 25V 0.1U	1	
C104	ECUX1E104ZFV	C.CAPACITOR CH 25V 0.1U	1	
C105	ECUX1E104ZFV	C.CAPACITOR CH 25V 0.1U	1	
C107	ECUX1E104ZFV	C.CAPACITOR CH 25V 0.1U	1	
C108	ECUX1E104ZFV	C.CAPACITOR CH 25V 0.1U	1	
C109	ECUX1E104ZFV	C.CAPACITOR CH 25V 0.1U	1	
C110	ECUX1E104ZFV	C.CAPACITOR CH 25V 0.1U	1	
C111	ECUX1E104ZFV	C.CAPACITOR CH 25V 0.1U	1	
C112	ECUX1E104ZFV	C.CAPACITOR CH 25V 0.1U	1	
C113	ECUX1E104ZFV	C.CAPACITOR CH 25V 0.1U	1	FOR VEP83405B
C113	ECUX1H103KBV	C.CAPACITOR CH 50V 0.01U	1	
C114	ECUX1E104ZFV	C.CAPACITOR CH 25V 0.1U	1	
C115	ECUX1E104ZFV	C.CAPACITOR CH 25V 0.1U	1	
C120	ECUX1E104ZFV	C.CAPACITOR CH 25V 0.1U	1	FOR VEP83405B
C130-36	ECUX1E104ZFV	C.CAPACITOR CH 25V 0.1U	7	
C170-76	ECUX1E104ZFV	C.CAPACITOR CH 25V 0.1U	7	
C178	ECUX1H103KBV	C.CAPACITOR CH 50V 0.01U	1	
C179-81	ECUX1E104ZFV	C.CAPACITOR CH 25V 0.1U	3	
C182	ECUX1H103KBV	C.CAPACITOR CH 50V 0.01U	1	
C183	ECUX1E104ZFV	C.CAPACITOR CH 25V 0.1U	1	
C184	ECUX1H331JCV	C.CAPACITOR CH 50V 330P	1	
C185	ECEV1CV100Q	E.CAPACITOR CH 16V 10U	1	
C186,87	ECUX1E104ZFV	C.CAPACITOR CH 25V 0.1U	2	
C188	ECEV1CV100Q	E.CAPACITOR CH 16V 10U	1	
C189-92	ECUX1E104ZFV	C.CAPACITOR CH 25V 0.1U	4	
C193	ECUX1H222KBV	C.CAPACITOR CH 50V 2200P	1	
C194	ECEV1EN3R3Q	E.CAPACITOR CH 25V 3.3U	1	
C195	ECUX1H101JCV	C.CAPACITOR CH 50V 100P	1	
C196	ECUX1H470JCV	C.CAPACITOR CH 50V 47P	1	
C197	ECUX1E104ZFV	C.CAPACITOR CH 25V 0.1U	1	
C198	ECEV1EN3R3Q	E.CAPACITOR CH 25V 3.3U	1	
C199	ECEV1CV100Q	E.CAPACITOR CH 16V 10U	1	
C200	ECUX1H102JCV	C.CAPACITOR CH 50V 1000P	1	
C201	ECEV1CV100Q	E.CAPACITOR CH 16V 10U	1	
C202	ECUX1E104ZFV	C.CAPACITOR CH 25V 0.1U	1	
C203	ECUX1H050CCV	C.CAPACITOR CH 50V 5P	1	

Ref.No.	Part No.	Part Name & Description	Pcs	Remarks
C204	ECUX1E104ZFV	C.CAPACITOR CH 25V 0.1U	1	
C205	ECUX1H151JCV	C.CAPACITOR CH 50V 150P	1	
C206	ECUX1H102JCV	C.CAPACITOR CH 50V 1000P	1	
C207	ECUX1H470JCV	C.CAPACITOR CH 50V 47P	1	
C209	ECUX1H050CCV	C.CAPACITOR CH 50V 5P	1	
C210	ECUX1E104ZFV	C.CAPACITOR CH 25V 0.1U	1	
C211	ECUX1H101JCV	C.CAPACITOR CH 50V 100P	1	
C212	VCK0150	C.CAPACITOR	1	
C213,14	ECUX1H101JCV	C.CAPACITOR CH 50V 100P	2	
C215,16	ECUX1E104ZFV	C.CAPACITOR CH 25V 0.1U	2	
C219,20	ECUX1E104ZFV	C.CAPACITOR CH 25V 0.1U	2	
C300-05	ECUX1E104ZFV	C.CAPACITOR CH 25V 0.1U	6	
C306	ECUX1H102JCV	C.CAPACITOR CH 50V 1000P	1	
C307-15	ECUX1E104ZFV	C.CAPACITOR CH 25V 0.1U	9	
C330,31	ECUX1E104ZFV	C.CAPACITOR CH 25V 0.1U	2	
C333-35	ECUX1E104ZFV	C.CAPACITOR CH 25V 0.1U	3	
C336	ECUX1H102JCV	C.CAPACITOR CH 50V 1000P	1	
C337-56	ECUX1E104ZFV	C.CAPACITOR CH 25V 0.1U	20	
C380	ECUX1E104ZFV	C.CAPACITOR CH 25V 0.1U	1	
C381	ECUX1H102JCV	C.CAPACITOR CH 50V 1000P	1	
C382-88	ECUX1E104ZFV	C.CAPACITOR CH 25V 0.1U	7	
C400-03	ECUX1E104ZFV	C.CAPACITOR CH 25V 0.1U	4	
C404	ECUX1H102JCV	C.CAPACITOR CH 50V 1000P	1	
C405	ECUX1H103KBV	C.CAPACITOR CH 50V 0.01U	1	
C406-10	ECUX1E104ZFV	C.CAPACITOR CH 25V 0.1U	5	
C420	ECUX1H102JCV	C.CAPACITOR CH 50V 1000P	1	
C421	ECUX1H103KBV	C.CAPACITOR CH 50V 0.01U	1	
C422	ECUX1E104ZFV	C.CAPACITOR CH 25V 0.1U	1	
C423	ECUX1H100DCV	C.CAPACITOR CH 50V 10P	1	
C424	ECUX1E104ZFV	C.CAPACITOR CH 25V 0.1U	1	
C425	ECUX1H102JCV	C.CAPACITOR CH 50V 1000P	1	
C426	ECUX1E104ZFV	C.CAPACITOR CH 25V 0.1U	1	
C427	ECUX1H180JCV	C.CAPACITOR CH 50V 18P	1	
C428	ECUX1E104ZFV	C.CAPACITOR CH 25V 0.1U	1	
C440	ECUX1E104ZFV	C.CAPACITOR CH 25V 0.1U	1	
C441	ECUX1H102JCV	C.CAPACITOR CH 50V 1000P	1	
C442	ECUX1E104ZFV	C.CAPACITOR CH 25V 0.1U	1	
C443	ECUX1H102JCV	C.CAPACITOR CH 50V 1000P	1	
C444-50	ECUX1E104ZFV	C.CAPACITOR CH 25V 0.1U	7	
C460-65	ECUX1E104ZFV	C.CAPACITOR CH 25V 0.1U	6	
C467-70	ECUX1E104ZFV	C.CAPACITOR CH 25V 0.1U	4	
C471	ECEV0JV330Q	E.CAPACITOR CH6.3V 33U	1	
C472	ECUX1E104ZFV	C.CAPACITOR CH 25V 0.1U	1	
C473	ECUX1H180JCV	C.CAPACITOR CH 50V 18P	1	
C474	ECUX1H682KBV	C.CAPACITOR CH 50V 6800P	1	
C475	ECEV0JV330Q	E.CAPACITOR CH6.3V 33U	1	
C476	ECUX1E104ZFV	C.CAPACITOR CH 25V 0.1U	1	
C477	ECUX1H102JCV	C.CAPACITOR CH 50V 1000P	1	
C478	ECUX1H682KBV	C.CAPACITOR CH 50V 6800P	1	
C479	ECUX1H180JCV	C.CAPACITOR CH 50V 18P	1	
C481	ECEV1CV100Q	E.CAPACITOR CH 16V 10U	1	
C482	ECEV1HV2R2Q	E.CAPACITOR CH 50V 2.2U	1	
C483	ECUX1E104ZFV	C.CAPACITOR CH 25V 0.1U	1	
C484	VCK0151	C.CAPACITOR	1	
C485	ECEV1CV100Q	E.CAPACITOR CH 16V 10U	1	
C486	ECEV1HV2R2Q	E.CAPACITOR CH 50V 2.2U	1	
C487	ECUX1E104ZFV	C.CAPACITOR CH 25V 0.1U	1	
C488	ECEV0JV330Q	E.CAPACITOR CH6.3V 33U	1	
C489,90	ECUX1E104ZFV	C.CAPACITOR CH 25V 0.1U	2	
C491	ECUX1H682KBV	C.CAPACITOR CH 50V 6800P	1	
C492	ECUX1H180JCV	C.CAPACITOR CH 50V 18P	1	
C493-00	ECUX1E104ZFV	C.CAPACITOR CH 25V 0.1U	8	
C510-18	ECUX1E104ZFV	C.CAPACITOR CH 25V 0.1U	9	
C519	ECUX1H102JCV	C.CAPACITOR CH 50V 1000P	1	
C520-23	ECUX1E104ZFV	C.CAPACITOR CH 25V 0.1U	4	
C542-44	ECUX1E104ZFV	C.CAPACITOR CH 25V 0.1U	3	
C549,50	ECUX1E104ZFV	C.CAPACITOR CH 25V 0.1U	2	
C640,41	ECUX1E104ZFV	C.CAPACITOR CH 25V 0.1U	2	
C642	ECUX1H330JCV	C.CAPACITOR CH 50V 33P	1	
C643	ECUX1H150JCV	C.CAPACITOR CH 50V 15P	1	
C644-57	ECUX1E104ZFV	C.CAPACITOR CH 25V 0.1U	14	
C670-74	ECUX1E104ZFV	C.CAPACITOR CH 25V 0.1U	5	
C760-71	ECUX1E104ZFV	C.CAPACITOR CH 25V 0.1U	12	
C780-82	ECUX1E104ZFV	C.CAPACITOR CH 25V 0.1U	3	
C784	ECUX1E104ZFV	C.CAPACITOR CH 25V 0.1U	1	

Ref.No.	Part No.	Part Name & Description	Pcs	Remarks
C800-11	ECUX1E104ZFV	C.CAPACITOR CH 25V 0.1U	12	
C840	ECUX1H102JCV	C.CAPACITOR CH 50V 1000P	1	
C841-44	ECUX1E104ZFV	C.CAPACITOR CH 25V 0.1U	4	
C870	ECUX1H103KBV	C.CAPACITOR CH 50V 0.01U	1	
C871,72	ECUX1E104ZFV	C.CAPACITOR CH 25V 0.1U	2	
C910,11	ECUX1E104ZFV	C.CAPACITOR CH 25V 0.1U	2	
C912	ECUX1H150JCV	C.CAPACITOR CH 50V 15P	1	
C913	ECUX1H120JCV	C.CAPACITOR CH 50V 12P	1	
C914	ECUX1H103KBV	C.CAPACITOR CH 50V 0.01U	1	
C915	ECUX1E104ZFV	C.CAPACITOR CH 25V 0.1U	1	
C916-18	ECUX1H102JCV	C.CAPACITOR CH 50V 1000P	3	
C980-86	ECUX1E104ZFV	C.CAPACITOR CH 25V 0.1U	7	
C987	ECUX1H102JCV	C.CAPACITOR CH 50V 1000P	1	
C1020-23	ECUX1E104ZFV	C.CAPACITOR CH 25V 0.1U	4	
C1026-29	ECUX1E104ZFV	C.CAPACITOR CH 25V 0.1U	4	
C1050-54	ECUX1E104ZFV	C.CAPACITOR CH 25V 0.1U	5	
C1060-65	ECUX1E104ZFV	C.CAPACITOR CH 25V 0.1U	6	
C1110-12	ECUX1E104ZFV	C.CAPACITOR CH 25V 0.1U	3	
D20,21	MA152WK	DIODE	2	FOR VEP83405B
D60-63	MA701A	DIODE	4	
D170	MA715	DIODE	1	
D171	MA335	DIODE	1	
D172,73	MA152WK	DIODE	2	
FL60-63	VLF0576T	FILTER	4	
FL460	VLF1118	FILTER	1	
FL461	VLF1116	FILTER	1	
FL462	VLF1117	FILTER	1	
IC20	NJM78L09UA	IC	1	FOR VEP83405B
IC21	NJM78L05UA	IC	1	FOR VEP83405B
IC22	NJM79L09UA	IC	1	FOR VEP83405B
IC23	MM74HC221AM	IC	1	FOR VEP83405B
IC24	MC74HC125AF	IC	1	FOR VEP83405B
IC25	NJM082BM	IC	1	FOR VEP83405B
IC50	T74VHCT244F	IC	1	
IC51	T203E3801AF1	IC	1	FOR VEP83405B
IC52,53	T74VHC244F	IC	2	FOR VEP83405B
IC54,55	TC7S04F	IC	2	FOR VEP83405B
IC56	T74VHC244F	IC	1	FOR VEP83405B
IC61	NJM78L09UA	IC	1	
IC62	NJM79L09UA	IC	1	
IC63	NJM78L05UA	IC	1	
IC65-67	XC62AP3202PL	IC	3	
IC68	XC62AP2302P	IC	1	
IC69-71	XC62AP3202PL	IC	3	
IC72	XC62AP2302P	IC	1	
IC73,74	XC62AP3202PL	IC	2	
IC75	74F244SJ	IC	1	
IC101	EPF10K20TC-4	IC	1	FOR VEP83405B
IC101	SN74S1051NS	IC	1	
IC102	CY7C19920ZC	IC	1	FOR VEP83405B
IC102	SN74S1051NS	IC	1	
IC103	74F541SJ	IC	1	
IC103	S80726ANDP	IC	1	FOR VEP83405B
IC104	74F541SJ	IC	1	
IC104	VSI3028B	IC	1	FOR VEP83405B
IC105	CY7C19920ZC	IC	1	FOR VEP83405B
IC105	TC7S04F	IC	1	
IC106	74F245SJ	IC	1	
IC107	74F138SJ	IC	1	
IC108,09	UPD71055GB	IC	2	
IC110	T74VHC244F	IC	1	
IC111	UPD71055GB	IC	1	
IC112	TC7S08F	IC	1	
IC114	74AC139SJ	IC	1	
IC115	74F244SJ	IC	1	
IC116	TC7S04F	IC	1	
IC130	TCVHC153F	IC	1	
IC131	UPD65841G025	IC	1	
IC132,33	T74VHCT244F	IC	2	
IC170	NJM082BM	IC	1	
IC171	NJM319M	IC	1	
IC172	MC74HC125AF	IC	1	

Ref.No.	Part No.	Part Name & Description	Pcs	Remarks
IC173	TC7S66F	IC	1	
IC174,75	NJM082BM	IC	2	
IC176	TC7S04F	IC	1	
IC177	UPC2384GA	IC	1	
IC178	74F244SJ	IC	1	
IC181	74F244SJ	IC	1	
IC184	T74LCX244F	IC	1	
IC185	MC10H124M	IC	1	
IC186-88	T74LCX244F	IC	3	
IC189	XC62AP3202PL	IC	1	
IC190	TC7S08F	IC	1	
IC300,01	T74VHC244F	IC	2	
IC302	MN67372A2	IC	1	
IC303	MN4707F	IC	1	
IC304	T74VHC244F	IC	1	
IC330	T74VHC244F	IC	1	
IC331	MC10H125M	IC	1	
IC332	T74LCX244F	IC	1	
IC334	M65401FP	IC	1	
IC335	MN673711	IC	1	
IC336-39	T74VHC245F	IC	4	
IC380	L7A1433	IC	1	
IC381	TC7S66F	IC	1	
IC382	MB81V4260S7	IC	1	
IC400	L7A1434	IC	1	
IC401	MC10H124M	IC	1	
IC402,03	TC7S08F	IC	2	
IC420	L7A1434	IC	1	
IC440	T74VHC08F	IC	1	
IC441	L7A1433	IC	1	
IC442	TC7S66F	IC	1	
IC443	MB81V4260S7	IC	1	
IC461	MN673711	IC	1	
IC462	M65401FP	IC	1	
IC463	M52660FP	IC	1	
IC464	TCVHC257F	IC	1	
IC465	T74VHCT244F	IC	1	
IC466	EPM7128STC15	IC	1	
IC510	MN67372A2	IC	1	
IC511	T74VHC244F	IC	1	
IC512	MN4707F	IC	1	
IC540,41	T74VHC244F	IC	2	
IC544	T74VHC32F	IC	1	
IC545,46	TC4S53F	IC	2	
IC640	CY7C19920ZC	IC	1	
IC641	EPM7128STC15	IC	1	
IC642	CG25123-5106	IC	1	
IC643,44	UPD42280G3	IC	2	
IC645	CY7C19920ZC	IC	1	
IC670	T74VHC244F	IC	1	
IC671	T160G70-1601	IC	1	
IC760-63	UPD42280G3	IC	4	
IC764-67	74ALS541SJ	IC	4	
IC780	EPM7128STC15	IC	1	
IC782	T74VHC244F	IC	1	
IC783	D485505G25	IC	1	
IC784	T74VHC244F	IC	1	
IC800	UPD42280G3	IC	1	
IC801	MC10H125M	IC	1	
IC802,03	T74LCX244F	IC	2	
IC804	T74VHC74F	IC	1	
IC805	UPD65843G026	IC	1	
IC840	UPD65868D022	IC	1	
IC870	VSI2705	IC	1	
IC871	T74VHC08F	IC	1	
IC910	VSI2705	IC	1	
IC911	T74VHC08F	IC	1	
IC912	T74VHCU04F	IC	1	
IC913	S80727ANDQ	IC	1	
IC980	T74VHC244F	IC	1	
IC981-83	TCVHC257F	IC	3	
IC984,85	T74VHCT244F	IC	2	
IC986	T74VHC74F	IC	1	
IC1020,21	UPD42280G3	IC	2	
IC1050,51	T74VHC244F	IC	2	

Ref.No.	Part No.	Part Name & Description	Pcs	Remarks
IC1052	TC7S04F	IC	1	
IC1053,54	T74VHC244F	IC	2	
IC1110	T74VHC244F	IC	1	
IC1111	TC4W53F	IC	1	
IS104	VJS3109	CONNECTOR (FEMALE)	1	FOR VEP83405B
L60-62	VLP0133	COIL	3	
L170-72	VLQ0319K470	COIL 47UH	3	
L174	VLQ0319M1R5	COIL 1.5UH	1	
L175	VLQ0163J3R9	COIL 3.9UH	1	
L176	VLQ0319K470	COIL 47UH	1	
L420	VLQ0163J1R5	COIL 1.5UH	1	
L460-62	VLQ0319K100	COIL 10UH	3	
P1	VJP3454B096	CONNECTOR (MALE)	1	
P1	VJS4064K160E	CONNECTOR (FEMALE)	1	FOR VEP83405B
P2	VJP3454B096	CONNECTOR (MALE)	1	
P60	VJP1246T	CONNECTOR (MALE) 6P	1	
P1050	VJP3418B060	CONNECTOR (MALE)	1	
P1060	VJP4064K160C	CONNECTOR (MALE)	1	
P1110	VJP4064K040C	CONNECTOR (MALE)	1	
Q170	2SC2295-C	TRANSISTOR	1	
R1	ERJ3GEY0R00	M.RESISTOR CH 1/16W 0	1	FOR VEP83405B
R1	ERJ3GEYJ470	M.RESISTOR CH 1/16W 47	1	
R2	ERJ3GEY0R00	M.RESISTOR CH 1/16W 0	1	FOR VEP83405B
R2	ERJ3GEYJ470	M.RESISTOR CH 1/16W 47	1	
R3	ERJ3GEY0R00	M.RESISTOR CH 1/16W 0	1	FOR VEP83405B
R3-19	ERJ3GEYJ470	M.RESISTOR CH 1/16W 47	17	
R20	ERJ3GEYJ473	M.RESISTOR CH 1/16W 47K	1	FOR VEP83405B
R21	ERJ3GEYJ273	M.RESISTOR CH 1/16W 27K	1	FOR VEP83405B
R21	ERJ3GEYJ470	M.RESISTOR CH 1/16W 47	1	
R22	ERJ3GEYG471	M.RESISTOR CH 1/16W 470	1	FOR VEP83405B
R22	ERJ3GEYJ470	M.RESISTOR CH 1/16W 47	1	
R23	ERJ3GEYJ103	M.RESISTOR CH 1/16W 10K	1	FOR VEP83405B
R23	ERJ3GEYJ470	M.RESISTOR CH 1/16W 47	1	
R24	ERJ3GEYJ103	M.RESISTOR CH 1/16W 10K	1	FOR VEP83405B
R24	ERJ3GEYJ470	M.RESISTOR CH 1/16W 47	1	
R25	ERJ3GEYJ153	M.RESISTOR CH 1/16W 15K	1	FOR VEP83405B
R25	ERJ3GEYJ470	M.RESISTOR CH 1/16W 47	1	
R26	ERJ3GEYJ223	M.RESISTOR CH 1/16W 22K	1	FOR VEP83405B
R26	ERJ3GEYJ470	M.RESISTOR CH 1/16W 47	1	
R27	ERJ3GEYJ105	M.RESISTOR CH 1/16W 1M	1	FOR VEP83405B
R27	ERJ3GEYJ470	M.RESISTOR CH 1/16W 47	1	
R28	ERJ3GEYG102	M.RESISTOR CH 1/16W 1K	1	FOR VEP83405B
R28-46	ERJ3GEYJ470	M.RESISTOR CH 1/16W 47	19	
R47	ERJ3GEY0R00	M.RESISTOR CH 1/16W 0	1	
R48-53	ERJ3GEYJ470	M.RESISTOR CH 1/16W 47	6	
R54	ERJ3GEY0R00	M.RESISTOR CH 1/16W 0	1	FOR VEP83405B
R54	ERJ3GEYJ470	M.RESISTOR CH 1/16W 47	1	
R55-57	ERJ3GEY0R00	M.RESISTOR CH 1/16W 0	3	
R58	ERJ3GEYJ101	M.RESISTOR CH 1/16W 100	1	
R59-63	ERJ3GEYG472	M.RESISTOR CH 1/16W 4.7K	5	
R64,65	ERJ3GEY0R00	M.RESISTOR CH 1/16W 0	2	
R66	ERJ3GEYG472	M.RESISTOR CH 1/16W 4.7K	1	
R78	ERJ3GEY0R00	M.RESISTOR CH 1/16W 0	1	FOR VEP83405B
R78	ERJ3GEYG102	M.RESISTOR CH 1/16W 1K	1	
R80	ERJ3GEY0R00	M.RESISTOR CH 1/16W 0	1	FOR VEP83405B
R80	ERJ3GEYG102	M.RESISTOR CH 1/16W 1K	1	
R81	ERJ3GEY0R00	M.RESISTOR CH 1/16W 0	1	FOR VEP83405B
R81	ERJ3GEYG102	M.RESISTOR CH 1/16W 1K	1	
R82-02	ERJ3GEY0R00	M.RESISTOR CH 1/16W 0	3	FOR VEP83405B
R84,85	ERJ3GEYG102	M.RESISTOR CH 1/16W 1K	2	
R87	ERJ3GEY0R00	M.RESISTOR CH 1/16W 0	1	
R92-95	ERJ3GEYG102	M.RESISTOR CH 1/16W 1K	4	FOR VEP83405B
R96	ERJ3GEY0R00	M.RESISTOR CH 1/16W 0	1	FOR VEP83405B
R98	ERJ3GEY0R00	M.RESISTOR CH 1/16W 0	1	FOR VEP83405B
R101	ERJ3GEY0R00	M.RESISTOR CH 1/16W 0	1	
R102	ERJ3GEYG102	M.RESISTOR CH 1/16W 1K	1	FOR VEP83405B
R102	ERJ3GEYJ103	M.RESISTOR CH 1/16W 10K	1	
R103	ERJ3GEYG102	M.RESISTOR CH 1/16W 1K	1	FOR VEP83405B
R103	ERJ3GEYJ103	M.RESISTOR CH 1/16W 10K	1	
R104	ERJ3GEY0R00	M.RESISTOR CH 1/16W 0	1	

Ref.No.	Part No.	Part Name & Description	Pcs	Remarks
R105	ERJ3GEYG102	M.RESISTOR CH 1/16W 1K	1	
R106	ERJ3GEYJ101	M.RESISTOR CH 1/16W 100	1	
R106	ERJ3GEYJ103	M.RESISTOR CH 1/16W 10K	1	FOR VEP83405B
R107	ERJ3GEYJ101	M.RESISTOR CH 1/16W 100	1	
R107	ERJ3GEYJ103	M.RESISTOR CH 1/16W 10K	1	FOR VEP83405B
R108	ERJ3GEY0R00	M.RESISTOR CH 1/16W 0	1	FOR VEP83405B
R108	ERJ3GEYJ272	M.RESISTOR CH 1/16W 2.7K	1	
R109	ERJ3GEYJ103	M.RESISTOR CH 1/16W 10K	1	FOR VEP83405B
R109	ERJ3GEYJ272	M.RESISTOR CH 1/16W 2.7K	1	
R110	ERJ3GEYJ103	M.RESISTOR CH 1/16W 10K	1	FOR VEP83405B
R110	ERJ3GEYJ272	M.RESISTOR CH 1/16W 2.7K	1	
R111	ERJ3GEYJ103	M.RESISTOR CH 1/16W 10K	1	FOR VEP83405B
R111-13	ERJ3GEYJ272	M.RESISTOR CH 1/16W 2.7K	3	
R114	ERJ3GEYJ101	M.RESISTOR CH 1/16W 100	1	FOR VEP83405B
R114	ERJ3GEYJ272	M.RESISTOR CH 1/16W 2.7K	1	
R115	ERJ3GEY0R00	M.RESISTOR CH 1/16W 0	1	FOR VEP83405B
R115	ERJ3GEYJ272	M.RESISTOR CH 1/16W 2.7K	1	
R116	ERJ3GEY0R00	M.RESISTOR CH 1/16W 0	1	FOR VEP83405B
R116	ERJ3GEYJ103	M.RESISTOR CH 1/16W 10K	1	
R117	ERJ3GEYG102	M.RESISTOR CH 1/16W 1K	1	FOR VEP83405B
R117	ERJ3GEYJ103	M.RESISTOR CH 1/16W 10K	1	
R118	ERJ3GEYG102	M.RESISTOR CH 1/16W 1K	1	FOR VEP83405B
R118	ERJ3GEYJ103	M.RESISTOR CH 1/16W 10K	1	
R119	ERJ3GEYG102	M.RESISTOR CH 1/16W 1K	1	FOR VEP83405B
R119	ERJ3GEYJ103	M.RESISTOR CH 1/16W 10K	1	
R120,21	ERJ3GEYG102	M.RESISTOR CH 1/16W 1K	2	
R122	ERJ3GEYG102	M.RESISTOR CH 1/16W 1K	1	FOR VEP83405B
R122	ERJ3GEYJ103	M.RESISTOR CH 1/16W 10K	1	
R123	ERJ3GEY0R00	M.RESISTOR CH 1/16W 0	1	
R124	ERJ3GEYJ101	M.RESISTOR CH 1/16W 100	1	
R127	ERJ3GEYJ103	M.RESISTOR CH 1/16W 10K	1	
R128	ERJ3GEYJ103	M.RESISTOR CH 1/16W 10K	1	
R128	ERJ3GEYJ103	M.RESISTOR CH 1/16W 10K	1	FOR VEP83405B
R132-35	ERJ3GEYJ103	M.RESISTOR CH 1/16W 10K	4	
R136	ERJ3GEY0R00	M.RESISTOR CH 1/16W 0	1	
R137-40	ERJ3GEYJ103	M.RESISTOR CH 1/16W 10K	4	
R144	ERJ3GEYJ101	M.RESISTOR CH 1/16W 100	1	
R145	ERJ3GEY0R00	M.RESISTOR CH 1/16W 0	1	
R147,48	ERJ3GEYJ103	M.RESISTOR CH 1/16W 10K	2	
R150	ERJ3GEY0R00	M.RESISTOR CH 1/16W 0	1	
R152,53	ERJ3GEYJ101	M.RESISTOR CH 1/16W 100	2	
R154-61	ERJ3GEYG472	M.RESISTOR CH 1/16W 4.7K	8	
R170,71	ERJ3GEY0R00	M.RESISTOR CH 1/16W 0	2	
R172	ERJ3GEYJ473	M.RESISTOR CH 1/16W 47K	1	
R173	ERJ3GEYG471	M.RESISTOR CH 1/16W 470	1	
R174	ERJ3GEYG222	M.RESISTOR CH 1/16W 2.2K	1	
R175	ERJ3GEYG472	M.RESISTOR CH 1/16W 4.7K	1	
R176	ERJ3GEYJ123	M.RESISTOR CH 1/16W 12K	1	
R177,78	ERJ3GEYJ103	M.RESISTOR CH 1/16W 10K	2	
R179	ERJ3GEYG472	M.RESISTOR CH 1/16W 4.7K	1	
R180	ERJ3GEYG222	M.RESISTOR CH 1/16W 2.2K	1	
R181	ERJ3GEYJ473	M.RESISTOR CH 1/16W 47K	1	
R182	ERJ3GEYJ273	M.RESISTOR CH 1/16W 27K	1	
R183	ERJ3GEYJ105	M.RESISTOR CH 1/16W 1M	1	
R184,85	ERJ3GEYJ103	M.RESISTOR CH 1/16W 10K	2	
R186	ERJ3GEYG102	M.RESISTOR CH 1/16W 1K	1	
R187	ERJ3GEY0R00	M.RESISTOR CH 1/16W 0	1	
R188	ERJ3GEYG102	M.RESISTOR CH 1/16W 1K	1	
R189	ERJ3GEYJ223	M.RESISTOR CH 1/16W 22K	1	
R190	ERJ3GEYJ105	M.RESISTOR CH 1/16W 1M	1	
R191,92	ERJ3GEYG102	M.RESISTOR CH 1/16W 1K	2	
R193	ERJ3GEYG472	M.RESISTOR CH 1/16W 4.7K	1	
R194,95	ERJ3GEY0R00	M.RESISTOR CH 1/16W 0	2	
R196	ERJ3GEYG102	M.RESISTOR CH 1/16W 1K	1	
R197	ERJ3GEYJ103	M.RESISTOR CH 1/16W 10K	1	
R198	ERJ3GEYG102	M.RESISTOR CH 1/16W 1K	1	
R199	ERJ3GEYJ103	M.RESISTOR CH 1/16W 10K	1	
R200	ERJ3GEY0R00	M.RESISTOR CH 1/16W 0	1	FOR VEP83405B
R200	ERJ3GEYJ221	M.RESISTOR CH 1/16W 220	1	
R201	ERJ3GEY0R00	M.RESISTOR CH 1/16W 0	1	FOR VEP83405B
R201,02	ERJ3GEYJ101	M.RESISTOR CH 1/16W 100	2	FOR VEP83405B
R202	ERJ3GEYJ103	M.RESISTOR CH 1/16W 10K	1	
R203	ERJ3GEYJ223	M.RESISTOR CH 1/16W 22K	1	
R204	ERJ3GEYJ105	M.RESISTOR CH 1/16W 1M	1	
R205	ERJ3GEYJ331	M.RESISTOR CH 1/16W 330	1	

Ref.No.	Part No.	Part Name & Description	Pcs	Remarks
R206	ERJ3GEYJ272	M.RESISTOR CH 1/16W 2.7K	1	
R207,08	ERJ3GEYG102	M.RESISTOR CH 1/16W 1K	2	
R209,10	ERJ3GEY0R00	M.RESISTOR CH 1/16W 0	2	
R211-13	ERJ3GEYJ101	M.RESISTOR CH 1/16W 100	3	
R216-22	ERJ3GEYJ470	M.RESISTOR CH 1/16W 47	7	
R223	ERJ3GEY0R00	M.RESISTOR CH 1/16W 0	1	
R228-35	ERJ3GEYJ470	M.RESISTOR CH 1/16W 47	8	
R236-39	ERJ3GEYJ101	M.RESISTOR CH 1/16W 100	4	
R240	ERJ3GEY0R00	M.RESISTOR CH 1/16W 0	1	
R241	ERJ3GEYG471	M.RESISTOR CH 1/16W 470	1	
R242	ERJ3GEY0R00	M.RESISTOR CH 1/16W 0	1	
R243	ERJ3GEYG471	M.RESISTOR CH 1/16W 470	1	
R244	ERJ3GEY0R00	M.RESISTOR CH 1/16W 0	1	
R245	ERJ3GEYJ221	M.RESISTOR CH 1/16W 220	1	
R246	ERJ3GEY0R00	M.RESISTOR CH 1/16W 0	1	
R247	ERJ3GEYJ221	M.RESISTOR CH 1/16W 220	1	
R248	ERJ3GEY0R00	M.RESISTOR CH 1/16W 0	1	
R249	ERJ3GEYG471	M.RESISTOR CH 1/16W 470	1	
R250	ERJ3GEY0R00	M.RESISTOR CH 1/16W 0	1	
R251	ERJ3GEYG471	M.RESISTOR CH 1/16W 470	1	
R252	ERJ3GEY0R00	M.RESISTOR CH 1/16W 0	1	
R253	ERJ3GEYG471	M.RESISTOR CH 1/16W 470	1	
R254	ERJ3GEY0R00	M.RESISTOR CH 1/16W 0	1	
R255	ERJ3GEYG471	M.RESISTOR CH 1/16W 470	1	
R256-58	ERJ3GEYJ470	M.RESISTOR CH 1/16W 47	3	
R260,61	ERJ3GEYJ470	M.RESISTOR CH 1/16W 47	2	
R264-67	ERJ3GEYJ470	M.RESISTOR CH 1/16W 47	4	
R272-87	ERJ3GEYJ470	M.RESISTOR CH 1/16W 47	16	
R288	ERJ3GEY0R00	M.RESISTOR CH 1/16W 0	1	
R290	ERJ3GEYJ103	M.RESISTOR CH 1/16W 10K	1	
R291	ERJ3GEY0R00	M.RESISTOR CH 1/16W 0	1	
R293	ERJ3GEYJ103	M.RESISTOR CH 1/16W 10K	1	
R300-15	ERJ3GEYJ103	M.RESISTOR CH 1/16W 10K	16	
R316,17	ERJ3GEYJ101	M.RESISTOR CH 1/16W 100	2	
R318,19	ERJ3GEY0R00	M.RESISTOR CH 1/16W 0	2	
R320	ERJ3GEYJ101	M.RESISTOR CH 1/16W 100	1	
R330,31	ERJ3GEYJ101	M.RESISTOR CH 1/16W 100	2	
R333-36	ERJ3GEYJ103	M.RESISTOR CH 1/16W 10K	4	
R337,38	ERJ3GEYJ470	M.RESISTOR CH 1/16W 47	2	
R340,41	ERJ3GEYJ101	M.RESISTOR CH 1/16W 100	2	
R342	ERJ3GEY0R00	M.RESISTOR CH 1/16W 0	1	
R344-48	ERJ3GEYJ470	M.RESISTOR CH 1/16W 47	5	
R351	ERJ3GEYJ103	M.RESISTOR CH 1/16W 10K	1	
R353-61	ERJ3GEYG472	M.RESISTOR CH 1/16W 4.7K	9	
R362-65	ERJ3GEYJ103	M.RESISTOR CH 1/16W 10K	4	
R366-74	ERJ3GEYJ273	M.RESISTOR CH 1/16W 27K	9	
R380	ERJ3GEYJ223	M.RESISTOR CH 1/16W 22K	1	
R400	ERJ3GEYJ103	M.RESISTOR CH 1/16W 10K	1	
R401	ERJ3GEY0R00	M.RESISTOR CH 1/16W 0	1	
R402	ERJ3GEYG471	M.RESISTOR CH 1/16W 470	1	
R403	ERJ3GEY0R00	M.RESISTOR CH 1/16W 0	1	
R404	ERJ3GEYG471	M.RESISTOR CH 1/16W 470	1	
R407	ERJ3GEY0R00	M.RESISTOR CH 1/16W 0	1	
R408	ERJ3GEYG471	M.RESISTOR CH 1/16W 470	1	
R409	ERJ3GEY0R00	M.RESISTOR CH 1/16W 0	1	
R410	ERJ3GEYG471	M.RESISTOR CH 1/16W 470	1	
R420	ERJ3GEYJ103	M.RESISTOR CH 1/16W 10K	1	
R421	ERJ3GEYJ470	M.RESISTOR CH 1/16W 47	1	
R422	ERJ3GEYJ105	M.RESISTOR CH 1/16W 1M	1	
R440,41	ERJ3GEY0R00	M.RESISTOR CH 1/16W 0	2	
R442	ERJ3GEYG102	M.RESISTOR CH 1/16W 1K	1	
R443	ERJ3GEYJ223	M.RESISTOR CH 1/16W 22K	1	
R444-53	ERJ3GEYJ273	M.RESISTOR CH 1/16W 27K	10	
R462	ERJ3GEY0R00	M.RESISTOR CH 1/16W 0	1	
R464-66	ERJ3GEYJ103	M.RESISTOR CH 1/16W 10K	3	
R469	ERJ3GEYJ391	M.RESISTOR CH 1/16W 390	1	
R470	ERJ3GEYJ681	M.RESISTOR CH 1/16W 680	1	
R471	ERJ3GEYJ391	M.RESISTOR CH 1/16W 390	1	
R472	ERJ3GEY0R00	M.RESISTOR CH 1/16W 0	1	
R473	ERJ3GEYJ681	M.RESISTOR CH 1/16W 680	1	
R476	ERJ3GEYJ103	M.RESISTOR CH 1/16W 10K	1	
R477	ERJ3GEYJ393	M.RESISTOR CH 1/16W 39K	1	
R478	ERJ3GEYJ222	M.RESISTOR CH 1/16W 2.2K	1	
R480	ERJ3GEYJ101	M.RESISTOR CH 1/16W 100	1	
R481	ERJ3GEYJ103	M.RESISTOR CH 1/16W 10K	1	

Ref.No.	Part No.	Part Name & Description	Pcs	Remarks
R483	ERJ3GEYJ681	M.RESISTOR CH 1/16W 680	1	
R484	ERJ3GEYJ391	M.RESISTOR CH 1/16W 390	1	
R487	ERJ3GEYJ470	M.RESISTOR CH 1/16W 47	1	
R488	ERJ3GEYJ101	M.RESISTOR CH 1/16W 100	1	
R489-94	ERJ3GEYG472	M.RESISTOR CH 1/16W 4.7K	6	
R497	ERJ3GEYG102	M.RESISTOR CH 1/16W 1K	1	
R510	ERJ3GEYJ101	M.RESISTOR CH 1/16W 100	1	
R540,41	ERJ3GEY0R00	M.RESISTOR CH 1/16W 0	2	
R543	ERJ3GEYJ101	M.RESISTOR CH 1/16W 100	1	
R544	ERJ3GEY0R00	M.RESISTOR CH 1/16W 0	1	
R547-50	ERJ3GEYG102	M.RESISTOR CH 1/16W 1K	4	
R551	ERJ3GEYJ103	M.RESISTOR CH 1/16W 10K	1	
R552-54	ERJ3GEYG102	M.RESISTOR CH 1/16W 1K	3	
R555	ERJ3GEYJ101	M.RESISTOR CH 1/16W 100	1	
R556	ERJ3GEY0R00	M.RESISTOR CH 1/16W 0	1	
R640-42	ERJ3GEYJ103	M.RESISTOR CH 1/16W 10K	3	
R643	ERJ3GEY0R00	M.RESISTOR CH 1/16W 0	1	
R644	ERJ3GEYJ271	M.RESISTOR CH 1/16W 270	1	
R645	ERJ3GEYJ101	M.RESISTOR CH 1/16W 100	1	
R647	ERJ3GEY0R00	M.RESISTOR CH 1/16W 0	1	
R651-53	ERJ3GEY0R00	M.RESISTOR CH 1/16W 0	3	
R655	ERJ3GEY0R00	M.RESISTOR CH 1/16W 0	1	
R659	ERJ3GEYG102	M.RESISTOR CH 1/16W 1K	1	
R670-72	ERJ3GEYJ103	M.RESISTOR CH 1/16W 10K	3	
R675	ERJ3GEYJ101	M.RESISTOR CH 1/16W 100	1	
R713	ERJ3GEYG102	M.RESISTOR CH 1/16W 1K	1	
R714	ERJ3GEYJ103	M.RESISTOR CH 1/16W 10K	1	
R760	ERJ3GEYJ101	M.RESISTOR CH 1/16W 100	1	
R765	ERJ3GEYJ101	M.RESISTOR CH 1/16W 100	1	
R766	ERJ3GEY0R00	M.RESISTOR CH 1/16W 0	1	
R781,82	ERJ3GEYJ103	M.RESISTOR CH 1/16W 10K	2	
R784	ERJ3GEYJ101	M.RESISTOR CH 1/16W 100	1	
R800-03	ERJ3GEYJ101	M.RESISTOR CH 1/16W 100	4	
R804	ERJ3GEY0R00	M.RESISTOR CH 1/16W 0	1	
R806-08	ERJ3GEYJ101	M.RESISTOR CH 1/16W 100	3	
R811,12	ERJ3GEY0R00	M.RESISTOR CH 1/16W 0	2	
R815	ERJ3GEY0R00	M.RESISTOR CH 1/16W 0	1	
R819	ERJ3GEY0R00	M.RESISTOR CH 1/16W 0	1	
R821	ERJ3GEY0R00	M.RESISTOR CH 1/16W 0	1	
R826	ERJ3GEY0R00	M.RESISTOR CH 1/16W 0	1	
R827	ERJ3GEYG102	M.RESISTOR CH 1/16W 1K	1	
R828	ERJ3GEYJ103	M.RESISTOR CH 1/16W 10K	1	
R840-48	ERJ3GEYJ470	M.RESISTOR CH 1/16W 47	9	
R849-54	ERJ3GEYJ103	M.RESISTOR CH 1/16W 10K	6	
R855	ERJ3GEYG102	M.RESISTOR CH 1/16W 1K	1	
R856-59	ERJ3GEYJ103	M.RESISTOR CH 1/16W 10K	4	
R860-64	ERJ3GEYJ470	M.RESISTOR CH 1/16W 47	5	
R870	ERJ3GEYJ473	M.RESISTOR CH 1/16W 47K	1	
R871	ERJ3GEYG102	M.RESISTOR CH 1/16W 1K	1	
R873,74	ERJ3GEY0R00	M.RESISTOR CH 1/16W 0	2	
R876,77	ERJ3GEYJ222	M.RESISTOR CH 1/16W 2.2K	2	
R878,79	ERJ3GEYJ101	M.RESISTOR CH 1/16W 100	2	
R880	ERJ3GEYG102	M.RESISTOR CH 1/16W 1K	1	
R882	ERJ3GEYG102	M.RESISTOR CH 1/16W 1K	1	
R883	ERJ3GEYJ103	M.RESISTOR CH 1/16W 10K	1	
R886	ERJ3GEYJ103	M.RESISTOR CH 1/16W 10K	1	
R887,88	ERJ3GEYG472	M.RESISTOR CH 1/16W 4.7K	2	
R889-96	ERJ3GEYG102	M.RESISTOR CH 1/16W 1K	8	
R897	ERJ3GEYJ104	M.RESISTOR CH 1/16W 100K	1	
R899	ERJ3GEYJ104	M.RESISTOR CH 1/16W 100K	1	
R900	ERJ3GEY0R00	M.RESISTOR CH 1/16W 0	1	
R901	ERJ3GEYJ104	M.RESISTOR CH 1/16W 100K	1	
R910	ERJ3GEYJ473	M.RESISTOR CH 1/16W 47K	1	
R911	ERJ3GEYG102	M.RESISTOR CH 1/16W 1K	1	
R912	ERJ3GEYJ473	M.RESISTOR CH 1/16W 47K	1	
R913	ERJ3GEYJ103	M.RESISTOR CH 1/16W 10K	1	
R915,16	ERJ3GEY0R00	M.RESISTOR CH 1/16W 0	2	
R918	ERJ3GEY0R00	M.RESISTOR CH 1/16W 0	1	
R919	ERJ3GEYJ105	M.RESISTOR CH 1/16W 1M	1	
R920	ERJ3GEYJ271	M.RESISTOR CH 1/16W 270	1	
R921	ERJ3GEYJ473	M.RESISTOR CH 1/16W 47K	1	
R922	ERJ3GEYJ103	M.RESISTOR CH 1/16W 10K	1	
R923,24	ERJ3GEYG102	M.RESISTOR CH 1/16W 1K	2	
R926,27	ERJ3GEY0R00	M.RESISTOR CH 1/16W 0	2	
R928	ERJ3GEYJ222	M.RESISTOR CH 1/16W 2.2K	1	

Ref.No.	Part No.	Part Name & Description	Pcs	Remarks
R930	ERJ3GEYJ222	M.RESISTOR CH 1/16W 2.2K	1	
R934,35	ERJ3GEYJ101	M.RESISTOR CH 1/16W 100	2	
R937	ERJ3GEY0R00	M.RESISTOR CH 1/16W 0	1	
R938-40	ERJ3GEYG102	M.RESISTOR CH 1/16W 1K	3	
R941,42	ERJ3GEYG472	M.RESISTOR CH 1/16W 4.7K	2	
R943,44	ERJ3GEY0R00	M.RESISTOR CH 1/16W 0	2	
R945	ERJ3GEYJ103	M.RESISTOR CH 1/16W 10K	1	
R946	ERJ3GEYG472	M.RESISTOR CH 1/16W 4.7K	1	
R947	ERJ3GEYG102	M.RESISTOR CH 1/16W 1K	1	
R948	ERJ3GEYJ103	M.RESISTOR CH 1/16W 10K	1	
R949,50	ERJ3GEY0R00	M.RESISTOR CH 1/16W 0	2	
R951-53	ERJ3GEYG102	M.RESISTOR CH 1/16W 1K	3	
R954	ERJ3GEY0R00	M.RESISTOR CH 1/16W 0	1	
R955,56	ERJ3GEYG102	M.RESISTOR CH 1/16W 1K	2	
R957	ERJ3GEYJ101	M.RESISTOR CH 1/16W 100	1	
R958	ERJ3GEYG102	M.RESISTOR CH 1/16W 1K	1	
R959	ERJ3GEYJ101	M.RESISTOR CH 1/16W 100	1	
R960	ERJ3GEYJ473	M.RESISTOR CH 1/16W 47K	1	
R961	ERJ3GEY0R00	M.RESISTOR CH 1/16W 0	1	
R962	ERJ3GEYJ104	M.RESISTOR CH 1/16W 100K	1	
R964	ERJ3GEYJ104	M.RESISTOR CH 1/16W 100K	1	
R965	ERJ3GEY0R00	M.RESISTOR CH 1/16W 0	1	
R966	ERJ3GEYJ104	M.RESISTOR CH 1/16W 100K	1	
R967	ERJ3GEY0R00	M.RESISTOR CH 1/16W 0	1	
R980-87	ERJ3GEYJ103	M.RESISTOR CH 1/16W 10K	8	
R988-93	ERJ3GEYJ101	M.RESISTOR CH 1/16W 100	6	
R994-07	ERJ3GEYG472	M.RESISTOR CH 1/16W 4.7K	14	
R1009	ERJ3GEYG472	M.RESISTOR CH 1/16W 4.7K	1	
R1020,21	ERJ3GEY0R00	M.RESISTOR CH 1/16W 0	2	
R1023-27	ERJ3GEY0R00	M.RESISTOR CH 1/16W 0	5	
R1037	ERJ3GEYJ101	M.RESISTOR CH 1/16W 100	1	
R1040	ERJ3GEYJ101	M.RESISTOR CH 1/16W 100	1	
R1041-48	ERJ3GEY0R00	M.RESISTOR CH 1/16W 0	8	
R1050	ERJ3GEYJ331	M.RESISTOR CH 1/16W 330	1	
R1051	ERJ3GEYJ103	M.RESISTOR CH 1/16W 10K	1	
R1060	ERJ3GEYJ103	M.RESISTOR CH 1/16W 10K	1	
R1110	ERJ3GEY0R00	M.RESISTOR CH 1/16W 0	1	
R1111	ERJ3GEYJ103	M.RESISTOR CH 1/16W 10K	1	
R1112	ERJ3GEYG102	M.RESISTOR CH 1/16W 1K	1	
R1113	ERJ3GEYJ101	M.RESISTOR CH 1/16W 100	1	
R1114	ERJ3GEYJ103	M.RESISTOR CH 1/16W 10K	1	
R1150	ERJ3GEY0R00	M.RESISTOR CH 1/16W 0	1	
SW100	VSS0342	SWITCH	1	
SW330	VSS0367-02B	SWITCH	1	
SW331	VSS0367-08B	SWITCH	1	
SW1110	VSS0342	SWITCH	1	
TG1-G3	EYF6CU	TEST POINT	3	
TG13-15	EYF6CU	TEST POINT	3	FOR VEP83405B
TG171	VJR0646	TEST POINT	1	
TG462	VJR0646	TEST POINT	1	
TG910	EYF6CU	TEST POINT	1	
TP1-12	EYF6CU	TEST POINT	12	FOR VEP83405B
TP20-22	EYF6CU	TEST POINT	3	FOR VEP83405B
TP50,51	EYF6CU	TEST POINT	2	FOR VEP83405B
TP130,31	EYF6CU	TEST POINT	2	
TP170	VJR0646	TEST POINT	1	
TP300,01	EYF6CU	TEST POINT	2	
TP303,04	EYF6CU	TEST POINT	2	
TP400	EYF6CU	TEST POINT	1	
TP421	EYF6CU	TEST POINT	1	
TP440,41	EYF6CU	TEST POINT	2	
TP460	EYF6CU	TEST POINT	1	
TP510	EYF6CU	TEST POINT	1	
TP870,71	EYF6CU	TEST POINT	2	
TP911,12	EYF6CU	TEST POINT	2	
VC170	ECV1ZW50X53T	TRIMMER	1	
VR460-62	EVMEGSA00B24	V.RESISTOR 20K	3	
X20	VSX0973	CRYSTAL OSCILLATOR	1	FOR VEP83405B
X420	VSX0645	CRYSTAL OSCILLATOR	1	

Ref.No.	Part No.	Part Name & Description	Pcs	Remarks
X910	VSX0637	CRYSTAL OSCILLATOR	1	
		MISCELLANEOUS		
	VML2143	CARD PULLER	1	
	VML2144	CARD PULLER	1	
	VMX2020	SPACER	4	FOR VEP83405B
	XYN3+K5	SCREW	4	FOR VEP83405B
	XYN3+K6	SCREW	4	FOR VEP83405B

Ref.No.	Part No.	Part Name & Description	Pcs	Remarks
■E6	VEP83409B	F6 VIDEO IN P.C.BOARD	1	(RTL)FOR AJ-D850P
C1,C2	ECUM1H103KBN	C.CAPACITOR CH 50V 0.01U	2	
C3	ECUM1H820JCN	C.CAPACITOR CH 50V 82P	1	
C4	ECUM1H103KBN	C.CAPACITOR CH 50V 0.01U	1	
C5-C7	ECUM1E104ZFN	C.CAPACITOR CH 25V 0.1U	3	
C8	ECEV0JV330Q	E.CAPACITOR CH6.3V 33U	1	
C9	ECUM1H101JCN	C.CAPACITOR CH 50V 100P	1	
C20-26	ECUM1E104ZFN	C.CAPACITOR CH 25V 0.1U	7	
C27	ECEV0JV330Q	E.CAPACITOR CH6.3V 33U	1	
C28	ECUM1E104ZFN	C.CAPACITOR CH 25V 0.1U	1	
C29	ECEV0JV330Q	E.CAPACITOR CH6.3V 33U	1	
C30	ECUM1E104ZFN	C.CAPACITOR CH 25V 0.1U	1	
C31	ECEV0JV330Q	E.CAPACITOR CH6.3V 33U	1	
C32	ECUM1E104ZFN	C.CAPACITOR CH 25V 0.1U	1	
C33	ECEV1EV4R7Q	E.CAPACITOR CH 25V 4.7U	1	
C51	ECUM1H101JCN	C.CAPACITOR CH 50V 100P	1	
C101,02	ECUM1E104ZFN	C.CAPACITOR CH 25V 0.1U	2	
C103	ECEV1CV470Q	E.CAPACITOR CH 16V 47U	1	
C104-06	ECUM1E104ZFN	C.CAPACITOR CH 25V 0.1U	3	
C107	ECEV0JV330Q	E.CAPACITOR CH6.3V 33U	1	
C108	ECUM1E104ZFN	C.CAPACITOR CH 25V 0.1U	1	
C109	ECEV1CV470Q	E.CAPACITOR CH 16V 47U	1	
C110-12	ECUM1E104ZFN	C.CAPACITOR CH 25V 0.1U	3	
C113	ECEV1CV470Q	E.CAPACITOR CH 16V 47U	1	
C114-16	ECUM1E104ZFN	C.CAPACITOR CH 25V 0.1U	3	
C117	ECEV0JV330Q	E.CAPACITOR CH6.3V 33U	1	
C118	ECUM1E104ZFN	C.CAPACITOR CH 25V 0.1U	1	
C119	ECEV1CV470Q	E.CAPACITOR CH 16V 47U	1	
C120	ECUM1E104ZFN	C.CAPACITOR CH 25V 0.1U	1	
C133,34	ECUM1E104ZFN	C.CAPACITOR CH 25V 0.1U	2	
C135	ECEV0JV330Q	E.CAPACITOR CH6.3V 33U	1	
C136	ECUM1E683KBN	C.CAPACITOR CH 25V 0.068U	1	
C137	ECUM1H471JCN	C.CAPACITOR CH 50V 470P	1	
C138	ECEV1HV010Q	E.CAPACITOR CH 50V 1U	1	
C139	ECUM1E104ZFN	C.CAPACITOR CH 25V 0.1U	1	
C140	ECEV1HV4R7Q	E.CAPACITOR CH 50V 4.7U	1	
C141	ECUM1H821JCN	C.CAPACITOR CH 50V 820P	1	
C142	ECEV0JV330Q	E.CAPACITOR CH6.3V 33U	1	
C143	ECUX1H392KBN	C.CAPACITOR CH 50V 3900P	1	
C144	ECUM1H152KBN	C.CAPACITOR CH 50V 1500P	1	
C145	ECEV1HVR68Q	E.CAPACITOR CH 50V 0.68U	1	
C146	ECUM1E104ZFN	C.CAPACITOR CH 25V 0.1U	1	
C151-58	ECUM1E104ZFN	C.CAPACITOR CH 25V 0.1U	8	
C160	ECUM1E104ZFN	C.CAPACITOR CH 25V 0.1U	1	
C161	ECUM1H101JCN	C.CAPACITOR CH 50V 100P	1	
C164	ECCF1H221JC	C.CAPACITOR 50V 220P	1	
C201-05	ECUM1E104ZFN	C.CAPACITOR CH 25V 0.1U	5	
C207-10	ECUM1E104ZFN	C.CAPACITOR CH 25V 0.1U	4	
C211	ECUM1H103KBN	C.CAPACITOR CH 50V 0.01U	1	
C251-54	ECUM1E104ZFN	C.CAPACITOR CH 25V 0.1U	4	
C256-58	ECUM1E104ZFN	C.CAPACITOR CH 25V 0.1U	3	
C262-66	ECUM1E104ZFN	C.CAPACITOR CH 25V 0.1U	5	
C301	ECEV1CV100Q	E.CAPACITOR CH 16V 10U	1	
C302	ECUM1E104ZFN	C.CAPACITOR CH 25V 0.1U	1	
C303	ECEV1EV4R7Q	E.CAPACITOR CH 25V 4.7U	1	
C304-06	ECUM1E104ZFN	C.CAPACITOR CH 25V 0.1U	3	
C307	ECEV1CV100Q	E.CAPACITOR CH 16V 10U	1	
C308	ECUM1E104ZFN	C.CAPACITOR CH 25V 0.1U	1	
C309	ECEV1CV100Q	E.CAPACITOR CH 16V 10U	1	
C310,11	ECUM1E104ZFN	C.CAPACITOR CH 25V 0.1U	2	
C312	ECUX1E104KBN	C.CAPACITOR CH 25V 0.1U	1	
C317	ECEV1CV100Q	E.CAPACITOR CH 16V 10U	1	
C318-21	ECUM1E104ZFN	C.CAPACITOR CH 25V 0.1U	4	
C351	ECEV0JV330Q	E.CAPACITOR CH6.3V 33U	1	
C352	ECUM1E104ZFN	C.CAPACITOR CH 25V 0.1U	1	
C353	ECEV0JV330Q	E.CAPACITOR CH6.3V 33U	1	
C354	ECUM1E104ZFN	C.CAPACITOR CH 25V 0.1U	1	
C355	ECEV0JV330Q	E.CAPACITOR CH6.3V 33U	1	
C356	ECUM1E104ZFN	C.CAPACITOR CH 25V 0.1U	1	
C357	ECEV0JV330Q	E.CAPACITOR CH6.3V 33U	1	
C358	ECUM1E104ZFN	C.CAPACITOR CH 25V 0.1U	1	
C359	ECEV1CV470Q	E.CAPACITOR CH 16V 47U	1	

Ref.No.	Part No.	Part Name & Description	Pcs	Remarks
C360	ECUM1E104ZFN	C.CAPACITOR CH 25V 0.1U	1	
C363-65	ECUM1E104ZFN	C.CAPACITOR CH 25V 0.1U	3	
C367	ECUX1E104KBN	C.CAPACITOR CH 25V 0.1U	1	
C368	ECUM1H180JCN	C.CAPACITOR CH 50V 18P	1	
C370-72	ECUM1E104ZFN	C.CAPACITOR CH 25V 0.1U	3	
C373	ECEV0JV330Q	E.CAPACITOR CH6.3V 33U	1	
C374	ECUM1E104ZFN	C.CAPACITOR CH 25V 0.1U	1	
C375	ECEV0JV330Q	E.CAPACITOR CH6.3V 33U	1	
C376-83	ECUM1E104ZFN	C.CAPACITOR CH 25V 0.1U	8	
C401	ECEV0JV330Q	E.CAPACITOR CH6.3V 33U	1	
C402	ECUM1E104ZFN	C.CAPACITOR CH 25V 0.1U	1	
C403	ECUM1H470JCN	C.CAPACITOR CH 50V 47P	1	
C404	ECUM1H820JCN	C.CAPACITOR CH 50V 82P	1	
C405,06	ECUM1H103KBN	C.CAPACITOR CH 50V 0.01U	2	
C407	ECEV0JV330Q	E.CAPACITOR CH6.3V 33U	1	
C408	ECUM1E104ZFN	C.CAPACITOR CH 25V 0.1U	1	
C409	ECEV1HVR47Q	E.CAPACITOR CH 50V 0.47U	1	
C410,11	ECUM1H103KBN	C.CAPACITOR CH 50V 0.01U	2	
C417	ECUM1E104ZFN	C.CAPACITOR CH 25V 0.1U	1	
C418	ECEV0JV330Q	E.CAPACITOR CH6.3V 33U	1	
C419	ECUM1E104ZFN	C.CAPACITOR CH 25V 0.1U	1	
C420	ECEV0JV330Q	E.CAPACITOR CH6.3V 33U	1	
C421	ECUM1E104ZFN	C.CAPACITOR CH 25V 0.1U	1	
C425	ECEV0JV330Q	E.CAPACITOR CH6.3V 33U	1	
C426	ECUM1E104ZFN	C.CAPACITOR CH 25V 0.1U	1	
C427,28	ECEV1HV010Q	E.CAPACITOR CH 50V 1U	2	
C429	ECEV0JN470Q	E.CAPACITOR CH6.3V 47U	1	
C430	ECUX1H102JCN	C.CAPACITOR CH 50V 1000P	1	
C431	ECUM1H103KBN	C.CAPACITOR CH 50V 0.01U	1	
C432	ECUM1H221JCN	C.CAPACITOR CH 50V 220P	1	
C433	ECUM1H152KBN	C.CAPACITOR CH 50V 1500P	1	
C434	ECEV1EV4R7Q	E.CAPACITOR CH 25V 4.7U	1	
C435	ECUM1H103KBN	C.CAPACITOR CH 50V 0.01U	1	
C436,37	ECUM1E104ZFN	C.CAPACITOR CH 25V 0.1U	2	
C438	ECEV0JV330Q	E.CAPACITOR CH6.3V 33U	1	
C439,40	ECUM1E104ZFN	C.CAPACITOR CH 25V 0.1U	2	
C441	ECEV0JV330Q	E.CAPACITOR CH6.3V 33U	1	
C442,43	ECUM1E104ZFN	C.CAPACITOR CH 25V 0.1U	2	
C444	ECUM1H390JCN	C.CAPACITOR CH 50V 39P	1	
C445	ECUM1H080DCN	C.CAPACITOR CH 50V 8P	1	
C446	ECUM1H181JCN	C.CAPACITOR CH 50V 180P	1	
C447,48	ECUM1E104ZFN	C.CAPACITOR CH 25V 0.1U	2	
C450	ECEV1CV470Q	E.CAPACITOR CH 16V 47U	1	
C451	ECEV0JV330Q	E.CAPACITOR CH6.3V 33U	1	
C452	ECUM1E104ZFN	C.CAPACITOR CH 25V 0.1U	1	
C453	ECUM1H470JCN	C.CAPACITOR CH 50V 47P	1	
C454	ECEV0JV330Q	E.CAPACITOR CH6.3V 33U	1	
C455-57	ECUM1E104ZFN	C.CAPACITOR CH 25V 0.1U	3	
C458	ECEV1HV010Q	E.CAPACITOR CH 50V 1U	1	
C459,60	ECUM1E104ZFN	C.CAPACITOR CH 25V 0.1U	2	
C461	ECEV0JV330Q	E.CAPACITOR CH6.3V 33U	1	
C462,63	ECUM1H103KBN	C.CAPACITOR CH 50V 0.01U	2	
C464-70	ECUM1E104ZFN	C.CAPACITOR CH 25V 0.1U	7	
C472	ECUM1E104ZFN	C.CAPACITOR CH 25V 0.1U	1	
C473	ECEV0JV330Q	E.CAPACITOR CH6.3V 33U	1	
C474,75	ECUM1E104ZFN	C.CAPACITOR CH 25V 0.1U	2	
C476	ECEV0JV330Q	E.CAPACITOR CH6.3V 33U	1	
C477	ECUM1E104ZFN	C.CAPACITOR CH 25V 0.1U	1	
C478	ECEV0JV330Q	E.CAPACITOR CH6.3V 33U	1	
C479	ECUM1E104ZFN	C.CAPACITOR CH 25V 0.1U	1	
C480	ECUX1E104KBN	C.CAPACITOR CH 25V 0.1U	1	
C481	ECUM1H330JCN	C.CAPACITOR CH 50V 33P	1	
C482	ECUM1H271JCN	C.CAPACITOR CH 50V 270P	1	
C483	ECUM1H220JCN	C.CAPACITOR CH 50V 22P	1	
C484	ECUM1H680JCN	C.CAPACITOR CH 50V 68P	1	
C485	ECUM1H070DCN	C.CAPACITOR CH 50V 7P	1	
C486	ECUM1H121JCN	C.CAPACITOR CH 50V 120P	1	
C487,88	ECUM1H100DCN	C.CAPACITOR CH 50V 10P	2	
C489	ECUM1H330JCN	C.CAPACITOR CH 50V 33P	1	
C490-92	ECUX1E104KBN	C.CAPACITOR CH 25V 0.1U	3	
C493,94	ECUM1E104ZFN	C.CAPACITOR CH 25V 0.1U	2	
C496	ECUX1E104KBN	C.CAPACITOR CH 25V 0.1U	1	
C497,98	ECUM1E104ZFN	C.CAPACITOR CH 25V 0.1U	2	
C499	ECUM1H151JCN	C.CAPACITOR CH 50V 150P	1	
C501	ECEV0JV330Q	E.CAPACITOR CH6.3V 33U	1	

Ref.No.	Part No.	Part Name & Description	Pcs	Remarks
C502	ECUM1E104ZFN	C.CAPACITOR CH 25V 0.1U	1	
C503	ECEV0JV330Q	E.CAPACITOR CH6.3V 33U	1	
C504	ECUM1E104ZFN	C.CAPACITOR CH 25V 0.1U	1	
C505	ECEV1CV100Q	E.CAPACITOR CH 16V 10U	1	
C506	ECUM1E104ZFN	C.CAPACITOR CH 25V 0.1U	1	
C507	ECEV1CV100Q	E.CAPACITOR CH 16V 10U	1	
C508	ECUM1E104ZFN	C.CAPACITOR CH 25V 0.1U	1	
C509	ECUM1H121JCN	C.CAPACITOR CH 50V 120P	1	
C510	ECUM1E104ZFN	C.CAPACITOR CH 25V 0.1U	1	
C511	ECUX1H102JCN	C.CAPACITOR CH 50V 1000P	1	
C512	ECUM1H221JCN	C.CAPACITOR CH 50V 220P	1	
C513	ECUX1H681JCN	C.CAPACITOR CH 50V 680P	1	
C514,15	ECUM1E104ZFN	C.CAPACITOR CH 25V 0.1U	2	
C516	ECUM1H560JCN	C.CAPACITOR CH 50V 56P	1	
C518	ECUX1E104KBN	C.CAPACITOR CH 25V 0.1U	1	
C519	ECUM1E104ZFN	C.CAPACITOR CH 25V 0.1U	1	
C520	ECUM1H103KBN	C.CAPACITOR CH 50V 0.01U	1	
C522	ECEV1CV470Q	E.CAPACITOR CH 16V 47U	1	
C523	ECUM1H220JCN	C.CAPACITOR CH 50V 22P	1	
C524	ECUM1H820JCN	C.CAPACITOR CH 50V 82P	1	
C525	ECUM1H080DCN	C.CAPACITOR CH 50V 8P	1	
C526	ECEV1CV470Q	E.CAPACITOR CH 16V 47U	1	
C527	ECUM1H103KBN	C.CAPACITOR CH 50V 0.01U	1	
C528	ECUM1H470JCN	C.CAPACITOR CH 50V 47P	1	
C529	ECUM1H060DCN	C.CAPACITOR CH 50V 6P	1	
C531	ECUM1E104ZFN	C.CAPACITOR CH 25V 0.1U	1	
C532	ECUX1E104KBN	C.CAPACITOR CH 25V 0.1U	1	
C534	ECUM1H103KBN	C.CAPACITOR CH 50V 0.01U	1	
C536	ECUM1H220JCN	C.CAPACITOR CH 50V 22P	1	
C537	ECUM1H820JCN	C.CAPACITOR CH 50V 82P	1	
C538	ECUM1H060DCN	C.CAPACITOR CH 50V 6P	1	
C539	ECUM1H080DCN	C.CAPACITOR CH 50V 8P	1	
C540	ECUM1H470JCN	C.CAPACITOR CH 50V 47P	1	
C541	ECEV1HV4R7Q	E.CAPACITOR CH 50V 4.7U	1	
C542	ECUX1E104KBN	C.CAPACITOR CH 25V 0.1U	1	
C545	ECUM1H120JCN	C.CAPACITOR CH 50V 12P	1	
C550	ECUM1H101JCN	C.CAPACITOR CH 50V 100P	1	
C551	ECUM1E104ZFN	C.CAPACITOR CH 25V 0.1U	1	
C552	ECEV0JV330Q	E.CAPACITOR CH6.3V 33U	1	
C553	ECUM1E104ZFN	C.CAPACITOR CH 25V 0.1U	1	
C554	ECEV1CV470Q	E.CAPACITOR CH 16V 47U	1	
C555	ECUM1E104ZFN	C.CAPACITOR CH 25V 0.1U	1	
C556	ECUM1H390JCN	C.CAPACITOR CH 50V 39P	1	
C557	ECUM1H181JCN	C.CAPACITOR CH 50V 180P	1	
C558,59	ECUM1E104ZFN	C.CAPACITOR CH 25V 0.1U	2	
C561	ECUM1H080DCN	C.CAPACITOR CH 50V 8P	1	
C562,63	ECUM1H103KBN	C.CAPACITOR CH 50V 0.01U	2	
C565,66	ECUM1H103KBN	C.CAPACITOR CH 50V 0.01U	2	
C567	ECUM1H820JCN	C.CAPACITOR CH 50V 82P	1	
C568	ECUM1H103KBN	C.CAPACITOR CH 50V 0.01U	1	
C569	ECUM1E104ZFN	C.CAPACITOR CH 25V 0.1U	1	
C570	ECEV0JV330Q	E.CAPACITOR CH6.3V 33U	1	
C571-73	ECUM1E104ZFN	C.CAPACITOR CH 25V 0.1U	3	
C601	ECUM1H470JCN	C.CAPACITOR CH 50V 47P	1	
C602	ECEV0JV330Q	E.CAPACITOR CH6.3V 33U	1	
C603	ECUM1E104ZFN	C.CAPACITOR CH 25V 0.1U	1	
C604	ECEV0JV330Q	E.CAPACITOR CH6.3V 33U	1	
C605	ECUM1E104ZFN	C.CAPACITOR CH 25V 0.1U	1	
C606	ECUM1H470JCN	C.CAPACITOR CH 50V 47P	1	
C607	ECUM1E104ZFN	C.CAPACITOR CH 25V 0.1U	1	
C608	ECUM1H331JCN	C.CAPACITOR CH 50V 330P	1	
C609	ECUM1H820JCN	C.CAPACITOR CH 50V 82P	1	
C610	ECUM1E104ZFN	C.CAPACITOR CH 25V 0.1U	1	
C612	ECUM1H470JCN	C.CAPACITOR CH 50V 47P	1	
C613	ECEV1HN010Q	E.CAPACITOR CH 50V 1U	1	
C614	ECUX1H102JCN	C.CAPACITOR CH 50V 1000P	1	
C615	ECUM1E104ZFN	C.CAPACITOR CH 25V 0.1U	1	
C616	ECUM1H331JCN	C.CAPACITOR CH 50V 330P	1	
C617	ECUM1E104ZFN	C.CAPACITOR CH 25V 0.1U	1	
C618	ECUX1H102JCN	C.CAPACITOR CH 50V 1000P	1	
C619	ECUM1E104ZFN	C.CAPACITOR CH 25V 0.1U	1	
C621	ECEV1HN010Q	E.CAPACITOR CH 50V 1U	1	
C622,23	ECUM1E104ZFN	C.CAPACITOR CH 25V 0.1U	2	
C624,25	ECUM1H103KBN	C.CAPACITOR CH 50V 0.01U	2	
C626	ECUX1H102JCN	C.CAPACITOR CH 50V 1000P	1	

Ref.No.	Part No.	Part Name & Description	Pcs	Remarks
C627	ECUM1E104ZFN	C.CAPACITOR CH 25V 0.1U	1	
C629	ECUM1H121JCN	C.CAPACITOR CH 50V 120P	1	
C651	ECEV0JV330Q	E.CAPACITOR CH6.3V 33U	1	
C652,53	ECUM1E104ZFN	C.CAPACITOR CH 25V 0.1U	2	
C654	ECEV0JV330Q	E.CAPACITOR CH6.3V 33U	1	
C655	ECUM1E104ZFN	C.CAPACITOR CH 25V 0.1U	1	
C701	ECUM1E104ZFN	C.CAPACITOR CH 25V 0.1U	1	
C702,03	ECEV0JV330Q	E.CAPACITOR CH6.3V 33U	2	
C704	ECUM1E104ZFN	C.CAPACITOR CH 25V 0.1U	1	
C705	ECEV0JV330Q	E.CAPACITOR CH6.3V 33U	1	
C706	ECUM1E104ZFN	C.CAPACITOR CH 25V 0.1U	1	
C707	ECEV0JV330Q	E.CAPACITOR CH6.3V 33U	1	
C708,09	ECUM1E104ZFN	C.CAPACITOR CH 25V 0.1U	2	
C710	ECUM1H010CCN	C.CAPACITOR CH 50V 1P	1	
C712-14	ECUM1E104ZFN	C.CAPACITOR CH 25V 0.1U	3	
C715	ECUX1E104KBN	C.CAPACITOR CH 25V 0.1U	1	
C716	ECUM1E104ZFN	C.CAPACITOR CH 25V 0.1U	1	
C717	ECEV0JV330Q	E.CAPACITOR CH6.3V 33U	1	
C718	ECUM1E104ZFN	C.CAPACITOR CH 25V 0.1U	1	
C719	ECEV0JV330Q	E.CAPACITOR CH6.3V 33U	1	
C720,21	ECUM1E104ZFN	C.CAPACITOR CH 25V 0.1U	2	
C722	ECEV0JV330Q	E.CAPACITOR CH6.3V 33U	1	
C723	ECUM1E104ZFN	C.CAPACITOR CH 25V 0.1U	1	
C724	ECEV0JV330Q	E.CAPACITOR CH6.3V 33U	1	
C725	ECUM1E104ZFN	C.CAPACITOR CH 25V 0.1U	1	
C726	ECEV0JV330Q	E.CAPACITOR CH6.3V 33U	1	
C727	ECUM1E104ZFN	C.CAPACITOR CH 25V 0.1U	1	
C728	ECUX1E104KBN	C.CAPACITOR CH 25V 0.1U	1	
C730	ECEV1CV470Q	E.CAPACITOR CH 16V 47U	1	
C731	ECUX1E104KBN	C.CAPACITOR CH 25V 0.1U	1	
C732	ECUM1H331JCN	C.CAPACITOR CH 50V 330P	1	
C733	ECUM1H470JCN	C.CAPACITOR CH 50V 47P	1	
C734	ECEV0JV330Q	E.CAPACITOR CH6.3V 33U	1	
C735-40	ECUM1E104ZFN	C.CAPACITOR CH 25V 0.1U	6	
C751	ECUM1E104ZFN	C.CAPACITOR CH 25V 0.1U	1	
C752,53	ECEV0JV330Q	E.CAPACITOR CH6.3V 33U	2	
C754	ECUM1E104ZFN	C.CAPACITOR CH 25V 0.1U	1	
C755	ECEV0JV330Q	E.CAPACITOR CH6.3V 33U	1	
C756	ECUM1E104ZFN	C.CAPACITOR CH 25V 0.1U	1	
C757	ECEV0JV330Q	E.CAPACITOR CH6.3V 33U	1	
C758,59	ECUM1E104ZFN	C.CAPACITOR CH 25V 0.1U	2	
C762-66	ECUM1E104ZFN	C.CAPACITOR CH 25V 0.1U	5	
C768	ECUM1E104ZFN	C.CAPACITOR CH 25V 0.1U	1	
C769	ECEV0JV330Q	E.CAPACITOR CH6.3V 33U	1	
C770,71	ECUM1E104ZFN	C.CAPACITOR CH 25V 0.1U	2	
C772	ECEV0JV330Q	E.CAPACITOR CH6.3V 33U	1	
C773	ECUM1E104ZFN	C.CAPACITOR CH 25V 0.1U	1	
C774	ECEV0JV330Q	E.CAPACITOR CH6.3V 33U	1	
C775	ECUM1E104ZFN	C.CAPACITOR CH 25V 0.1U	1	
C776	ECEV1CV100Q	E.CAPACITOR CH 16V 10U	1	
C777	ECUM1E104ZFN	C.CAPACITOR CH 25V 0.1U	1	
C778	ECUX1E104KBN	C.CAPACITOR CH 25V 0.1U	1	
C780	ECEV1CV470Q	E.CAPACITOR CH 16V 47U	1	
C781	ECUX1E104KBN	C.CAPACITOR CH 25V 0.1U	1	
C782	ECUM1H331JCN	C.CAPACITOR CH 50V 330P	1	
C783	ECUM1H470JCN	C.CAPACITOR CH 50V 47P	1	
C784	ECEV0JV330Q	E.CAPACITOR CH6.3V 33U	1	
C785-87	ECUM1E104ZFN	C.CAPACITOR CH 25V 0.1U	3	
C790	ECUM1H080DCN	C.CAPACITOR CH 50V 8P	1	
C791	ECUM1H470JCN	C.CAPACITOR CH 50V 47P	1	
C792	ECEV1CV100Q	E.CAPACITOR CH 16V 10U	1	
C801	ECUM1E104ZFN	C.CAPACITOR CH 25V 0.1U	1	
C802,03	ECEV0JV330Q	E.CAPACITOR CH6.3V 33U	2	
C804	ECUM1E104ZFN	C.CAPACITOR CH 25V 0.1U	1	
C805	ECEV0JV330Q	E.CAPACITOR CH6.3V 33U	1	
C806	ECUM1E104ZFN	C.CAPACITOR CH 25V 0.1U	1	
C807	ECEV0JV330Q	E.CAPACITOR CH6.3V 33U	1	
C808,09	ECUM1E104ZFN	C.CAPACITOR CH 25V 0.1U	2	
C812-16	ECUM1E104ZFN	C.CAPACITOR CH 25V 0.1U	5	
C818	ECUM1E104ZFN	C.CAPACITOR CH 25V 0.1U	1	
C819	ECEV0JV330Q	E.CAPACITOR CH6.3V 33U	1	
C820,21	ECUM1E104ZFN	C.CAPACITOR CH 25V 0.1U	2	
C822	ECEV0JV330Q	E.CAPACITOR CH6.3V 33U	1	
C823	ECUM1E104ZFN	C.CAPACITOR CH 25V 0.1U	1	
C824	ECEV0JV330Q	E.CAPACITOR CH6.3V 33U	1	

Ref.No.	Part No.	Part Name & Description	Pcs	Remarks
C825	ECUM1E104ZFN	C.CAPACITOR CH 25V 0.1U	1	
C826	ECEV1CV100Q	E.CAPACITOR CH 16V 10U	1	
C827	ECUM1E104ZFN	C.CAPACITOR CH 25V 0.1U	1	
C828	ECUX1E104KBN	C.CAPACITOR CH 25V 0.1U	1	
C830	ECEV1CV470Q	E.CAPACITOR CH 16V 47U	1	
C831	ECUX1E104KBN	C.CAPACITOR CH 25V 0.1U	1	
C832	ECUM1H331JCN	C.CAPACITOR CH 50V 330P	1	
C833	ECUM1H470JCN	C.CAPACITOR CH 50V 47P	1	
C834	ECEV0JV330Q	E.CAPACITOR CH6.3V 33U	1	
C835-37	ECUM1E104ZFN	C.CAPACITOR CH 25V 0.1U	3	
C840	ECUM1H080DCN	C.CAPACITOR CH 50V 8P	1	
C841	ECUM1H470JCN	C.CAPACITOR CH 50V 47P	1	
C842	ECEV1CV100Q	E.CAPACITOR CH 16V 10U	1	
C851-60	ECUM1E104ZFN	C.CAPACITOR CH 25V 0.1U	10	
C881-96	ECUM1E104ZFN	C.CAPACITOR CH 25V 0.1U	16	
C901-03	ECUM1E104ZFN	C.CAPACITOR CH 25V 0.1U	3	
C905-17	ECUM1E104ZFN	C.CAPACITOR CH 25V 0.1U	13	
C919	ECEV0JV330Q	E.CAPACITOR CH6.3V 33U	1	
C920	ECUM1E104ZFN	C.CAPACITOR CH 25V 0.1U	1	
C921	ECEV0JV330Q	E.CAPACITOR CH6.3V 33U	1	
C922-27	ECUM1E104ZFN	C.CAPACITOR CH 25V 0.1U	6	
C928	ECEV0JV330Q	E.CAPACITOR CH6.3V 33U	1	
C929	ECEV1CV100Q	E.CAPACITOR CH 16V 10U	1	
C930,31	ECUM1E104ZFN	C.CAPACITOR CH 25V 0.1U	2	
C932	ECEV0JV330Q	E.CAPACITOR CH6.3V 33U	1	
C934	ECEV1EV4R7Q	E.CAPACITOR CH 25V 4.7U	1	
C935	ECUM1H470JCN	C.CAPACITOR CH 50V 47P	1	
C936	ECEV0JV330Q	E.CAPACITOR CH6.3V 33U	1	
C937	ECUM1H560JCN	C.CAPACITOR CH 50V 56P	1	
C938	ECUM1H180JCN	C.CAPACITOR CH 50V 18P	1	
C939	ECUM1H121JCN	C.CAPACITOR CH 50V 120P	1	
C940,41	ECUM1E104ZFN	C.CAPACITOR CH 25V 0.1U	2	
C942	ECEV0JV330Q	E.CAPACITOR CH6.3V 33U	1	
C943,44	ECUM1E104ZFN	C.CAPACITOR CH 25V 0.1U	2	
C951	ECUM1H101JCN	C.CAPACITOR CH 50V 100P	1	
C952-56	ECUM1E104ZFN	C.CAPACITOR CH 25V 0.1U	5	
C957	ECUM1H103KBN	C.CAPACITOR CH 50V 0.01U	1	
C958	ECUX1E104KBN	C.CAPACITOR CH 25V 0.1U	1	
C959	ECEV1HNR47Q	E.CAPACITOR CH 50V 0.47U	1	
C960,61	ECUX1E104KBN	C.CAPACITOR CH 25V 0.1U	2	
C962	ECUM1E104ZFN	C.CAPACITOR CH 25V 0.1U	1	
C963	ECEV0JV330Q	E.CAPACITOR CH6.3V 33U	1	
C964,65	ECUM1E104ZFN	C.CAPACITOR CH 25V 0.1U	2	
C966	ECEV0JV330Q	E.CAPACITOR CH6.3V 33U	1	
C967,68	ECUM1E104ZFN	C.CAPACITOR CH 25V 0.1U	2	
C973	ECEV1CV470Q	E.CAPACITOR CH 16V 47U	1	
C974	ECUM1E104ZFN	C.CAPACITOR CH 25V 0.1U	1	
C975	ECEV1CV470Q	E.CAPACITOR CH 16V 47U	1	
C976	ECUM1E104ZFN	C.CAPACITOR CH 25V 0.1U	1	
C980	ECEV0JV330Q	E.CAPACITOR CH6.3V 33U	1	
C981,82	ECUM1E104ZFN	C.CAPACITOR CH 25V 0.1U	2	
C983	ECEV0JV330Q	E.CAPACITOR CH6.3V 33U	1	
C984,85	ECUM1E104ZFN	C.CAPACITOR CH 25V 0.1U	2	
D301,02	MA152K	DIODE	2	
D351,52	MA152K	DIODE	2	
D401	MA152WK	DIODE	1	
D551	MA152WK	DIODE	1	
D601	MA335	DIODE	1	
D602	MA152WA	DIODE	1	
D603	MA152K	DIODE	1	
D701,02	MA152K	DIODE	2	
D751,52	MA152K	DIODE	2	
D801,02	MA152K	DIODE	2	
D901	MA152K	DIODE	1	
FL101	VLF1016A223	FILTER	1	
FL103	VLF1016A223	FILTER	1	
FL301	VLF1294	FILTER	1	
FL351	VLF1016A223	FILTER	1	
FL451	VLF1016A223	FILTER	1	
FL601,02	VLF1016A223	FILTER	2	
FL701	VLF1294	FILTER	1	
FL702	VLF1016A223	FILTER	1	
FL751	VLF1295	FILTER	1	

Ref.No.	Part No.	Part Name & Description	Pcs	Remarks
FL801	VLF1295	FILTER	1	
FL851,52	VLF1016A223	FILTER	2	
FL911	VLF1016A223	FILTER	1	
FL951	VLF1294	FILTER	1	
FL981,82	VLF1016A223	FILTER	2	
IC101	AN78N09	IC	1	
IC102	AN78N05	IC	1	
IC103	AN79N09	IC	1	
IC104	AN79N05	IC	1	
IC151-54	MC10H125M	IC	4	
IC156	74F244SJ	IC	1	
IC201	VSI2496	IC	1	
IC204	74F245SJ	IC	1	
IC207,08	UPD71055GB	IC	2	
IC209,10	SN74S1051NS	IC	2	
IC251	VSI2153A	IC	1	
IC252	VSI2154	IC	1	
IC253	T74HCT541AF	IC	1	
IC254	T74HCT374AF	IC	1	
IC255	74F574SJ	IC	1	
IC259	T74HCT374AF	IC	1	
IC301	EL2082CS	IC	1	
IC302	NJM082BM	IC	1	
IC303	DAC10GS	IC	1	
IC351	AD818AR	IC	1	
IC352	NJM084M	IC	1	
IC353	CXD1175AM	IC	1	
IC354,55	NJM78L05UA	IC	2	
IC356	NJM79L05UA	IC	1	
IC401	UPC1862GS	IC	1	
IC402,03	NJM78L05UA	IC	2	
IC404	NJM79L05UA	IC	1	
IC405	AN91A12S	IC	1	
IC406	TC4W53F	IC	1	
IC407	MC74HC00AF	IC	1	
IC450	AD8047AR	IC	1	
IC451	UPD6486GF3BA	IC	1	
IC452,53	UPD42280G3	IC	2	
IC454	NJM78L05UA	IC	1	
IC455	NJM79L05UA	IC	1	
IC458	AD8047AR	IC	1	
IC460	UPD42280G3	IC	1	
IC461	MB40760PF	IC	1	
IC462	VSI2716	IC	1	
IC463	NJM78L05UA	IC	1	
IC501	SN74LS221NS	IC	1	
IC502	MM74HC221AM	IC	1	
IC503	UPD65013BC16	IC	1	
IC504,05	NJM1496M	IC	2	
IC507	MC74HC4053F	IC	1	
IC508	MC74HC04AF	IC	1	
IC509,10	NJM082BM	IC	2	
IC511	NJM78L05UA	IC	1	
IC512	NJM79L05UA	IC	1	
IC517	NJM78L05UA	IC	1	
IC518	NJM79L05UA	IC	1	
IC551	MC14538BF	IC	1	
IC552	AN91A12S	IC	1	
IC553	NJM78L05UA	IC	1	
IC554	NJM79L05UA	IC	1	
IC555	MN53015VZW	IC	1	
IC601	SN74LS221NS	IC	1	
IC602	MC74HC00AF	IC	1	
IC603	NJM082BM	IC	1	
IC604	MC74HC74AF	IC	1	
IC605	TC4S584F	IC	1	
IC606	TC4W53F	IC	1	
IC607	MC74HC244AF	IC	1	
IC608	SN74LS221NS	IC	1	
IC701	MC74HC4053F	IC	1	
IC702	AD848JR	IC	1	
IC703	NJM084M	IC	1	
IC704	CXD1175AM	IC	1	
IC705,06	NJM78L05UA	IC	2	

Ref.No.	Part No.	Part Name & Description	Pcs	Remarks
IC707	NJM79L05UA	IC	1	
IC751	MC74HC4053F	IC	1	
IC752	AD848JR	IC	1	
IC753	NJM084M	IC	1	
IC754	MB40568PF	IC	1	
IC755,56	NJM78L05UA	IC	2	
IC757	NJM79L05UA	IC	1	
IC758	AN78N09	IC	1	
IC759	T74HCT541AF	IC	1	
IC801	MC74HC4053F	IC	1	
IC802	AD848JR	IC	1	
IC803	NJM084M	IC	1	
IC804	MB40568PF	IC	1	
IC805,06	NJM78L05UA	IC	2	
IC807	NJM79L05UA	IC	1	
IC808	AN78N09	IC	1	
IC809	T74HCT541AF	IC	1	
IC851	T160G70-1601	IC	1	
IC852,53	UPD42280G3	IC	2	
IC901-03	74F244SJ	IC	3	
IC904	NJM78L05UA	IC	1	
IC905	AN3296S	IC	1	
IC911	TC7W125FU	IC	1	
IC912	MC68HC68VBI	IC	1	
IC913	NJM78L05UA	IC	1	
IC951	T74HCT374AF	IC	1	
IC952	VSI2497	IC	1	
IC953	TC7W125FU	IC	1	
IC954	MB40768PF	IC	1	
IC955,56	NJM78L05UA	IC	2	
IC957	NJM79L05UA	IC	1	
IC958	AD8047AR	IC	1	
IC959	MC74HC4053F	IC	1	
IC981	T160G41-1437	IC	1	
IC982,83	UPD42280G3	IC	2	
IC984	VSI2679	IC	1	
IC985,86	74F244SJ	IC	2	
L1,L2	VLP0133	COIL	2	
L101,02	VLP0133	COIL	2	
L301-04	VLQ0319K101	COIL 100UH	4	
L351	VLQ0163J101	COIL 100UH	1	
L352	VLQ0319K101	COIL 100UH	1	
L401	VLQ0163J150	COIL 15UH	1	
L402-05	VLQ0319K100	COIL 10UH	4	
L406	VLQ0133J471	COIL 470UH	1	
L407	VLQ0319K101	COIL 100UH	1	
L451	VLQ0319K101	COIL 100UH	1	
L452	VLQ0319K100	COIL 10UH	1	
L454	VLQ0163J270	COIL 27UH	1	
L455	VLQ0163J6R8	COIL 6.8UH	1	
L456	VLQ0163J5R6	COIL 5.6UH	1	
L457	VLQ0319K101	COIL 100UH	1	
L458,59	VLQ0163J2R2	COIL 2.2UH	2	
L501-03	VLQ0319K101	COIL 100UH	3	
L505,06	VLQ0163J680	COIL 68UH	2	
L507	VLQ0319K101	COIL 100UH	1	
L553	VLQ0133J471	COIL 470UH	1	
L601	VLQ0163J3R3	COIL 3.3UH	1	
L651,52	VLQ0319K101	COIL 100UH	2	
L703	VLQ0319K101	COIL 100UH	1	
L704	VLQ0133J821	COIL 820UH	1	
L754	VLQ0133J821	COIL 820UH	1	
L804	VLQ0133J821	COIL 820UH	1	
L911	VLQ0319K101	COIL 100UH	1	
L951	VLQ0163J470	COIL 47UH	1	
P1,P2	VJP3454B096	CONNECTOR (MALE)	2	
Q301	2SB709A-R	TRANSISTOR	1	
Q302,03	2SD601A-R	TRANSISTOR	2	
Q351	2SD601A-R	TRANSISTOR	1	
Q352	2SB709A-R	TRANSISTOR	1	
Q353	2SK198-R	TRANSISTOR	1	
Q401	2SD601A-R	TRANSISTOR	1	

Ref.No.	Part No.	Part Name & Description	Pcs	Remarks
Q404	2SB709A-R	TRANSISTOR	1	
Q405,06	2SD601A-R	TRANSISTOR	2	
Q452	2SD601A-R	TRANSISTOR	1	
Q454	2SB709A-R	TRANSISTOR	1	
Q455	2SD601A-R	TRANSISTOR	1	
Q501,02	2SD601A-R	TRANSISTOR	2	
Q503	2SB709A-R	TRANSISTOR	1	
Q504,05	2SD601A-R	TRANSISTOR	2	
Q507,08	2SD601A-R	TRANSISTOR	2	
Q509	2SB709A-R	TRANSISTOR	1	
Q510,11	2SD601A-R	TRANSISTOR	2	
Q518	2SD601A-R	TRANSISTOR	1	
Q601	2SC3757-R	TRANSISTOR	1	
Q602,03	2SA1226E34	TRANSISTOR	2	
Q604	2SC3757-R	TRANSISTOR	1	
Q651	2SB709A-R	TRANSISTOR	1	
Q652	2SD601A-R	TRANSISTOR	1	
Q653	2SB709A-R	TRANSISTOR	1	
Q654	2SD601A-R	TRANSISTOR	1	
Q655	XN1213	TRANSISTOR-RESISTOR	1	
Q656	2SB709A-R	TRANSISTOR	1	
Q657	2SD601A-R	TRANSISTOR	1	
Q658	2SC3757-R	TRANSISTOR	1	
Q701	2SD601A-R	TRANSISTOR	1	
Q702	2SB709A-R	TRANSISTOR	1	
Q703	2SD601A-R	TRANSISTOR	1	
Q704	2SB709A-R	TRANSISTOR	1	
Q705	2SK198-R	TRANSISTOR	1	
Q706	2SB709A-R	TRANSISTOR	1	
Q707	2SD601A-R	TRANSISTOR	1	
Q751	2SD601A-R	TRANSISTOR	1	
Q752	2SB709A-R	TRANSISTOR	1	
Q753	2SD601A-R	TRANSISTOR	1	
Q754	2SB709A-R	TRANSISTOR	1	
Q755	2SK198-R	TRANSISTOR	1	
Q756	2SD601A-R	TRANSISTOR	1	
Q801	2SD601A-R	TRANSISTOR	1	
Q802	2SB709A-R	TRANSISTOR	1	
Q803	2SD601A-R	TRANSISTOR	1	
Q804	2SB709A-R	TRANSISTOR	1	
Q805	2SK198-R	TRANSISTOR	1	
Q806	2SD601A-R	TRANSISTOR	1	
Q901,02	2SD601A-R	TRANSISTOR	2	
Q951	2SD601A-R	TRANSISTOR	1	
Q952	2SB709A-R	TRANSISTOR	1	
Q953	2SD601A-R	TRANSISTOR	1	
Q954	2SB709A-R	TRANSISTOR	1	
Q955	2SC3757-R	TRANSISTOR	1	
Q956	2SD601A-R	TRANSISTOR	1	
Q957	2SB709A-R	TRANSISTOR	1	
QR201	MUN2212	TRANSISTOR-RESISTOR	1	
QR701,02	MUN2213	TRANSISTOR-RESISTOR	2	
QR751	MUN2213	TRANSISTOR-RESISTOR	1	
QR801	MUN2213	TRANSISTOR-RESISTOR	1	
R7-34	ERJ6GEY0R00	M.RESISTOR CH 1/10W 0	28	
R37-53	ERJ6GEY0R00	M.RESISTOR CH 1/10W 0	17	
R56-81	ERJ6GEY0R00	M.RESISTOR CH 1/10W 0	26	
R98	ERJ6GEYG101	M.RESISTOR CH 1/10W 100	1	
R99	ERJ6GEY0R00	M.RESISTOR CH 1/10W 0	1	
R101-08	ERJ6GEYF472	M.RESISTOR CH 1/10W 4.7K	8	
R111	ERJ6GEYG470	M.RESISTOR CH 1/10W 47	1	
R112	ERJ6GEYG222	M.RESISTOR CH 1/10W 2.2K	1	
R113	ERJ6GEYG102	M.RESISTOR CH 1/10W 1K	1	
R114	ERJ6GEY0R00	M.RESISTOR CH 1/10W 0	1	
R115	ERJ6GEYG122	M.RESISTOR CH 1/10W 1.2K	1	
R116	ERJ6GEYG102	M.RESISTOR CH 1/10W 1K	1	
R117,18	ERJ6GEYG222	M.RESISTOR CH 1/10W 2.2K	2	
R119,20	ERJ6GEYG331	M.RESISTOR CH 1/10W 330	2	
R121	ERJ6GEYG222	M.RESISTOR CH 1/10W 2.2K	1	
R122	ERJ6GEYG103	M.RESISTOR CH 1/10W 10K	1	
R123	ERJ6GEYG221	M.RESISTOR CH 1/10W 220	1	
R124	ERJ6GEYG102	M.RESISTOR CH 1/10W 1K	1	
R125,26	ERJ6GEYG103	M.RESISTOR CH 1/10W 10K	2	

Ref.No.	Part No.	Part Name & Description	Pcs	Remarks
R127	ERJ6GEYG102	M.RESISTOR CH 1/10W 1K	1	
R128	ERJ6GEYG222	M.RESISTOR CH 1/10W 2.2K	1	
R129	ERJ6GEYG102	M.RESISTOR CH 1/10W 1K	1	
R130	ERJ6GEYG222	M.RESISTOR CH 1/10W 2.2K	1	
R131-33	ERJ6GEYG102	M.RESISTOR CH 1/10W 1K	3	
R134	ERJ6GEYG272	M.RESISTOR CH 1/10W 2.7K	1	
R135	ERJ6GEYG103	M.RESISTOR CH 1/10W 10K	1	
R151-62	ERJ6GEYG101	M.RESISTOR CH 1/10W 100	12	
R163	ERJ6GEY0R00	M.RESISTOR CH 1/10W 0	1	
R165,66	ERJ6GEYG101	M.RESISTOR CH 1/10W 100	2	
R168,69	ERJ6GEYG103	M.RESISTOR CH 1/10W 10K	2	
R172	ERJ6GEYG103	M.RESISTOR CH 1/10W 10K	1	
R173	ERJ6GEY0R00	M.RESISTOR CH 1/10W 0	1	
R175	ERJ6GEY0R00	M.RESISTOR CH 1/10W 0	1	
R177-80	ERJ6GEYG391	M.RESISTOR CH 1/10W 390	4	
R181	ERJ6GEYG332	M.RESISTOR CH 1/10W 3.3K	1	
R182-91	ERJ6GEYG391	M.RESISTOR CH 1/10W 390	10	
R192	ERJ6GEYG332	M.RESISTOR CH 1/10W 3.3K	1	
R193,94	ERJ6GEYG101	M.RESISTOR CH 1/10W 100	2	
R201,02	ERJ6GEYG103	M.RESISTOR CH 1/10W 10K	2	
R208	ERJ6GEYG103	M.RESISTOR CH 1/10W 10K	1	
R214,15	ERJ6GEYG101	M.RESISTOR CH 1/10W 100	2	
R216	ERJ6GEYG103	M.RESISTOR CH 1/10W 10K	1	
R219,20	ERJ6GEY0R00	M.RESISTOR CH 1/10W 0	2	
R221	ERJ6GEYG223	M.RESISTOR CH 1/10W 22K	1	
R222	ERJ6GEYF333	M.RESISTOR CH 1/10W 33K	1	
R223	ERJ6GEYG564	M.RESISTOR CH 1/10W 560K	1	
R224	ERJ6GEYG102	M.RESISTOR CH 1/10W 1K	1	
R225	ERJ6GEYG683	M.RESISTOR CH 1/10W 68K	1	
R226	ERJ6GEYG331	M.RESISTOR CH 1/10W 330	1	
R227	ERJ6GEYJ684	M.RESISTOR CH 1/10W 680K	1	
R228	ERJ6GEYG753	M.RESISTOR CH 1/10W 75	1	
R229	ERJ6GEYG104	M.RESISTOR CH 1/10W 100K	1	
R230	ERJ6GEYG103	M.RESISTOR CH 1/10W 10K	1	
R231	ERJ6GEYG682	M.REISITOR CH 1/10W 6.8K	1	
R232	ERJ6GEYG153	M.RESISTOR CH 1/10W 15K	1	
R233	ERJ6GEYF473	M.RESISTOR CH 1/10W 47K	1	
R251	ERJ6GEYG101	M.RESISTOR CH 1/10W 100	1	
R301	ERJ6GEYG562	M.RESISTOR CH 1/10W 5.6K	1	
R302	ERJ6GEYG102	M.RESISTOR CH 1/10W 1K	1	
R303	ERJ6GEYG101	M.RESISTOR CH 1/10W 100	1	
R304,05	ERJ6GEYG331	M.RESISTOR CH 1/10W 330	2	
R306,07	ERJ6GEYG102	M.RESISTOR CH 1/10W 1K	2	
R308	ERJ6GEYF561	M.RESISTOR CH 1/10W 560	1	
R309	ERJ6GEYG183	M.RESISTOR CH 1/10W 18K	1	
R310	ERJ6GEY0R00	M.RESISTOR CH 1/10W 0	1	
R311	ERJ6GEYG102	M.RESISTOR CH 1/10W 1K	1	
R312	ERJ6GEYG101	M.RESISTOR CH 1/10W 100	1	
R315,16	ERJ6GEYF822	M.RESISTOR CH 1/10W 8.2K	2	
R317	ERJ6GEY0R00	M.RESISTOR CH 1/10W 0	1	
R318	ERJ6GEYF333	M.RESISTOR CH 1/10W 33K	1	
R352	ERJ6GEYG101	M.RESISTOR CH 1/10W 100	1	
R354	ERJ6GEYG152	M.RESISTOR CH 1/10W 1.5K	1	
R355	ERJ6GEYF561	M.RESISTOR CH 1/10W 560	1	
R358	ERJ6GEYG122	M.RESISTOR CH 1/10W 1.2K	1	
R359	ERJ6GEYG101	M.RESISTOR CH 1/10W 100	1	
R360	ERJ6GEY0R00	M.RESISTOR CH 1/10W 0	1	
R361	ERJ6GEYG103	M.RESISTOR CH 1/10W 10K	1	
R362	ERJ6GEYG102	M.RESISTOR CH 1/10W 1K	1	
R363	ERJ6GEYG394	M.RESISTOR CH 1/10W 390K	1	
R364	ERJ6GEYG154	M.RESISTOR CH 1/10W 150K	1	
R365	ERJ6GEYG102	M.RESISTOR CH 1/10W 1K	1	
R366	ERJ6GEYG101	M.RESISTOR CH 1/10W 100	1	
R369	ERJ6GEYG101	M.RESISTOR CH 1/10W 100	1	
R370	ERJ6GEYG103	M.RESISTOR CH 1/10W 10K	1	
R371	ERJ6GEYG682	M.REISITOR CH 1/10W 6.8K	1	
R401	ERJ6GEYG681	M.RESISTOR CH 1/10W 680	1	
R402	ERJ6GEYG103	M.RESISTOR CH 1/10W 10K	1	
R403	ERJ6GEYG681	M.RESISTOR CH 1/10W 680	1	
R404	ERJ6GEYG103	M.RESISTOR CH 1/10W 10K	1	
R407	ERJ6GEYG105	M.RESISTOR CH 1/10W 1M	1	
R412	ERJ6GEYG102	M.RESISTOR CH 1/10W 1K	1	
R413	ERJ6GEYF333	M.RESISTOR CH 1/10W 33K	1	
R414	ERJ6GEYG103	M.RESISTOR CH 1/10W 10K	1	
R415	ERJ6GEYG221	M.RESISTOR CH 1/10W 220	1	

Ref.No.	Part No.	Part Name & Description	Pcs	Remarks
R416	ERJ6GEYF473	M.RESISTOR CH 1/10W 47K	1	
R417	ERJ6GEYG221	M.RESISTOR CH 1/10W 220	1	
R418	ERJ6GEYF473	M.RESISTOR CH 1/10W 47K	1	
R419	ERJ6GEYG104	M.RESISTOR CH 1/10W 100K	1	
R420	ERJ6GEYG272	M.RESISTOR CH 1/10W 2.7K	1	
R421	ERJ6GEYG271	M.RESISTOR CH 1/10W 270	1	
R422	ERJ6GEYG222	M.RESISTOR CH 1/10W 2.2K	1	
R423,24	ERJ6GEYG103	M.RESISTOR CH 1/10W 10K	2	
R425	ERJ6GEYG152	M.RESISTOR CH 1/10W 1.5K	1	
R426	ERJ6GEYF822	M.RESISTOR CH 1/10W 8.2K	1	
R427	ERDS2TJ392	C.RESISTOR 1/4W 3.9K	1	
R431	ERJ6GEY0R00	M.RESISTOR CH 1/10W 0	1	
R432	ERJ6GEYG102	M.RESISTOR CH 1/10W 1K	1	
R433	ERJ6GEYG222	M.RESISTOR CH 1/10W 2.2K	1	
R436	ERJ6GEYG224	M.RESISTOR CH 1/10W 220K	1	
R437	ERJ6GEYJ684	M.RESISTOR CH 1/10W 680K	1	
R438-40	ERJ6GEYG103	M.RESISTOR CH 1/10W 10K	3	
R441	ERJ6GEYG562	M.RESISTOR CH 1/10W 5.6K	1	
R452	ERJ6GEYG332	M.RESISTOR CH 1/10W 3.3K	1	
R453	ERJ6GEYG102	M.RESISTOR CH 1/10W 1K	1	
R454	ERJ6GEYG330	M.RESISTOR CH 1/10W 33	1	
R455,56	ERJ6GEYG102	M.RESISTOR CH 1/10W 1K	2	
R457-60	ERJ6GEY0R00	M.RESISTOR CH 1/10W 0	4	
R463	ERJ6GEY0R00	M.RESISTOR CH 1/10W 0	1	
R465	ERJ6GEY0R00	M.RESISTOR CH 1/10W 0	1	
R466	ERJ6RBD162	M.RESISTOR CH 1/10W 1.6K	1	
R468	ERJ6GEYG391	M.RESISTOR CH 1/10W 390	1	
R469	ERJ6GEYG103	M.RESISTOR CH 1/10W 10K	1	
R471	ERJ6GEYG102	M.RESISTOR CH 1/10W 1K	1	
R473	ERJ6GEYG331	M.RESISTOR CH 1/10W 330	1	
R474	ERJ6GEYG102	M.RESISTOR CH 1/10W 1K	1	
R475	ERJ6GEYG101	M.RESISTOR CH 1/10W 100	1	
R480	ERJ6GEYG101	M.RESISTOR CH 1/10W 100	1	
R481	ERJ6GEYG331	M.RESISTOR CH 1/10W 330	1	
R482	ERJ6GEYG103	M.RESISTOR CH 1/10W 10K	1	
R484-86	ERJ6GEYG101	M.RESISTOR CH 1/10W 100	3	
R492	ERJ6GEYG101	M.RESISTOR CH 1/10W 100	1	
R493	ERJ6GEYG821	M.RESISTOR CH 1/10W 820	1	
R494	ERJ6GEYG103	M.RESISTOR CH 1/10W 10K	1	
R495	ERJ6GEYG391	M.RESISTOR CH 1/10W 390	1	
R496,97	ERJ6GEYG101	M.RESISTOR CH 1/10W 100	2	
R498	ERJ6GEYG102	M.RESISTOR CH 1/10W 1K	1	
R499	ERJ6GEYG471	M.RESISTOR CH 1/10W 470	1	
R500	ERJ6GEYG272	M.RESISTOR CH 1/10W 2.7K	1	
R501	ERJ6GEYG183	M.RESISTOR CH 1/10W 18K	1	
R502	ERJ6GEYF333	M.RESISTOR CH 1/10W 33K	1	
R503	ERJ6GEYG223	M.RESISTOR CH 1/10W 22K	1	
R504	ERJ6GEYG471	M.RESISTOR CH 1/10W 470	1	
R505,06	ERJ6GEY0R00	M.RESISTOR CH 1/10W 0	2	
R510,11	ERJ6GEYG222	M.RESISTOR CH 1/10W 2.2K	2	
R512	ERJ6GEYG102	M.RESISTOR CH 1/10W 1K	1	
R513	ERJ6GEYF472	M.RESISTOR CH 1/10W 4.7K	1	
R514	ERJ6GEYG101	M.RESISTOR CH 1/10W 100	1	
R516	ERJ6GEYG102	M.RESISTOR CH 1/10W 1K	1	
R517	ERJ6GEYF561	M.RESISTOR CH 1/10W 560	1	
R518	ERJ6GEYG102	M.RESISTOR CH 1/10W 1K	1	
R519	ERJ6GEYF822	M.RESISTOR CH 1/10W 8.2K	1	
R520,21	ERJ6GEYG332	M.RESISTOR CH 1/10W 3.3K	2	
R522,23	ERJ6GEYG121	M.RESISTOR CH 1/10W 120	2	
R524	ERJ6GEYG101	M.RESISTOR CH 1/10W 100	1	
R525	ERJ6GEYG222	M.RESISTOR CH 1/10W 2.2K	1	
R526	ERJ6GEYG102	M.RESISTOR CH 1/10W 1K	1	
R527	ERJ6GEYG152	M.RESISTOR CH 1/10W 1.5K	1	
R528	ERJ6GEYG470	M.RESISTOR CH 1/10W 47	1	
R529	ERJ6GEYG152	M.RESISTOR CH 1/10W 1.5K	1	
R530	ERJ6GEYG681	M.RESISTOR CH 1/10W 680	1	
R531	ERJ6GEYG470	M.RESISTOR CH 1/10W 47	1	
R532	ERJ6GEYG102	M.RESISTOR CH 1/10W 1K	1	
R533	ERJ6GEYF472	M.RESISTOR CH 1/10W 4.7K	1	
R537	ERJ6GEYG101	M.RESISTOR CH 1/10W 100	1	
R538	ERJ6GEYF472	M.RESISTOR CH 1/10W 4.7K	1	
R539	ERJ6GEYG103	M.RESISTOR CH 1/10W 10K	1	
R540	ERJ6GEYG101	M.RESISTOR CH 1/10W 100	1	
R541	ERJ6GEY0R00	M.RESISTOR CH 1/10W 0	1	
R542	ERJ6GEYG821	M.RESISTOR CH 1/10W 820	1	

Ref.No.	Part No.	Part Name & Description	Pcs	Remarks
R543,44	ERJ6GEYG102	M.RESISTOR CH 1/10W 1K	2	
R545	ERJ6GEYF822	M.RESISTOR CH 1/10W 8.2K	1	
R546,47	ERJ6GEYG332	M.RESISTOR CH 1/10W 3.3K	2	
R548,49	ERJ6GEYG121	M.RESISTOR CH 1/10W 120	2	
R550	ERJ6GEYG153	M.RESISTOR CH 1/10W 15K	1	
R558	ERJ6GEYG222	M.RESISTOR CH 1/10W 2.2K	1	
R559	ERJ6GEYG102	M.RESISTOR CH 1/10W 1K	1	
R562	ERJ6GEYF473	M.RESISTOR CH 1/10W 47K	1	
R565	ERJ6GEYG224	M.RESISTOR CH 1/10W 220K	1	
R566	ERJ6GEYJ684	M.RESISTOR CH 1/10W 680K	1	
R567-70	ERJ6GEYG103	M.RESISTOR CH 1/10W 10K	4	
R575	ERDS2TJ392	C.RESISTOR 1/4W 3.9K	1	
R601	ERJ6GEYG103	M.RESISTOR CH 1/10W 10K	1	
R602	ERJ6GEYG222	M.RESISTOR CH 1/10W 2.2K	1	
R603	ERJ6GEYG682	M.REISITOR CH 1/10W 6.8K	1	
R604	ERJ6GEYF472	M.RESISTOR CH 1/10W 4.7K	1	
R605	ERJ6GEYG102	M.RESISTOR CH 1/10W 1K	1	
R606,07	ERJ6GEYF472	M.RESISTOR CH 1/10W 4.7K	2	
R608,09	ERJ6GEYG222	M.RESISTOR CH 1/10W 2.2K	2	
R610	ERJ6GEYG392	M.RESISTOR CH 1/10W 3.9K	1	
R611	ERJ6GEYG332	M.RESISTOR CH 1/10W 3.3K	1	
R612,13	ERJ6GEYG682	M.REISITOR CH 1/10W 6.8K	2	
R614	ERJ6GEYG223	M.RESISTOR CH 1/10W 22K	1	
R615	ERJ6GEYG682	M.REISITOR CH 1/10W 6.8K	1	
R616	ERJ6GEYG223	M.RESISTOR CH 1/10W 22K	1	
R617	ERJ6GEYG332	M.RESISTOR CH 1/10W 3.3K	1	
R618	ERJ6GEYG153	M.RESISTOR CH 1/10W 15K	1	
R619	ERJ6GEYG681	M.RESISTOR CH 1/10W 680	1	
R620,21	ERJ6GEYG152	M.RESISTOR CH 1/10W 1.5K	2	
R622	ERJ6GEYG103	M.RESISTOR CH 1/10W 10K	1	
R623	ERJ6GEYG104	M.RESISTOR CH 1/10W 100K	1	
R624	ERJ6GEYG152	M.RESISTOR CH 1/10W 1.5K	1	
R625	ERJ6GEYG683	M.RESISTOR CH 1/10W 68K	1	
R626	ERJ6GEYG101	M.RESISTOR CH 1/10W 100	1	
R631	ERJ6GEY0R00	M.RESISTOR CH 1/10W 0	1	
R651	ERJ6GEYG152	M.RESISTOR CH 1/10W 1.5K	1	
R652	ERJ6RBD562	M.RESISTOR CH 1/10W 5.6K	1	
R653	ERJ6GEYG152	M.RESISTOR CH 1/10W 1.5K	1	
R657	ERJ6GEYG102	M.RESISTOR CH 1/10W 1K	1	
R658	ERJ6GEYG152	M.RESISTOR CH 1/10W 1.5K	1	
R659	ERJ6RBD122	M.RESISTOR CH 1/10W 1.2K	1	
R660	ERJ6RBD272	M.RESISTOR CH 1/10W 2.7K	1	
R661	ERJ6GEYG152	M.RESISTOR CH 1/10W 1.5K	1	
R663	ERJ6GEYG102	M.RESISTOR CH 1/10W 1K	1	
R664	ERJ6GEYG152	M.RESISTOR CH 1/10W 1.5K	1	
R665	ERJ6RBD122	M.RESISTOR CH 1/10W 1.2K	1	
R666	ERJ6RBD272	M.RESISTOR CH 1/10W 2.7K	1	
R667	ERJ6GEYG152	M.RESISTOR CH 1/10W 1.5K	1	
R668	ERJ6GEYG102	M.RESISTOR CH 1/10W 1K	1	
R669	ERJ6RBD101	M.RESISTOR CH 1/10W 100	1	
R670	ERJ6RBD473	M.RESISTOR CH 1/10W 47K	1	
R671,72	ERJ6GEYG103	M.RESISTOR CH 1/10W 10K	2	
R701	ERJ6GEYG103	M.RESISTOR CH 1/10W 10K	1	
R702	ERJ6GEYG102	M.RESISTOR CH 1/10W 1K	1	
R703	ERJ6GEYG331	M.RESISTOR CH 1/10W 330	1	
R704	ERJ6GEYG152	M.RESISTOR CH 1/10W 1.5K	1	
R707	ERJ6GEYG101	M.RESISTOR CH 1/10W 100	1	
R708	ERJ6GEYG181	M.RESISTOR CH 1/10W 180	1	
R711	ERJ6GEYG122	M.RESISTOR CH 1/10W 1.2K	1	
R712	ERJ6GEYG101	M.RESISTOR CH 1/10W 100	1	
R713	ERJ6GEY0R00	M.RESISTOR CH 1/10W 0	1	
R714	ERJ6GEYF333	M.RESISTOR CH 1/10W 33K	1	
R715,16	ERJ6GEYG102	M.RESISTOR CH 1/10W 1K	2	
R717	ERJ6GEYG101	M.RESISTOR CH 1/10W 100	1	
R718	ERJ6GEYG394	M.RESISTOR CH 1/10W 390K	1	
R719	ERJ6GEYG154	M.RESISTOR CH 1/10W 150K	1	
R720,21	ERJ6GEYG105	M.RESISTOR CH 1/10W 1M	2	
R722	ERJ6GEYG101	M.RESISTOR CH 1/10W 100	1	
R723	ERJ6GEYG103	M.RESISTOR CH 1/10W 10K	1	
R724	ERJ6GEYG222	M.RESISTOR CH 1/10W 2.2K	1	
R725	ERJ6GEYG122	M.RESISTOR CH 1/10W 1.2K	1	
R726	ERJ6GEYG331	M.RESISTOR CH 1/10W 330	1	
R727	ERJ6GEYG101	M.RESISTOR CH 1/10W 100	1	
R728	ERJ6GEYG102	M.RESISTOR CH 1/10W 1K	1	
R729	ERJ6GEYG221	M.RESISTOR CH 1/10W 220	1	

Ref.No.	Part No.	Part Name & Description	Pcs	Remarks
R730	ERJ6GEYG152	M.RESISTOR CH 1/10W 1.5K	1	
R731	ERJ6GEYF822	M.RESISTOR CH 1/10W 8.2K	1	
R732	ERJ6GEYG102	M.RESISTOR CH 1/10W 1K	1	
R733	ERJ6GEYG681	M.RESISTOR CH 1/10W 680	1	
R734	ERJ6GEYG102	M.RESISTOR CH 1/10W 1K	1	
R735,36	ERJ6GEYG101	M.RESISTOR CH 1/10W 100	2	
R751	ERJ6GEYG103	M.RESISTOR CH 1/10W 10K	1	
R752	ERJ6GEYG152	M.RESISTOR CH 1/10W 1.5K	1	
R753	ERJ6GEYG471	M.RESISTOR CH 1/10W 470	1	
R754	ERJ6GEYG152	M.RESISTOR CH 1/10W 1.5K	1	
R757	ERJ6GEYG101	M.RESISTOR CH 1/10W 100	1	
R758	ERJ6GEYG391	M.RESISTOR CH 1/10W 390	1	
R761	ERJ6GEYG122	M.RESISTOR CH 1/10W 1.2K	1	
R762	ERJ6GEYG101	M.RESISTOR CH 1/10W 100	1	
R763,64	ERJ6GEYF123	M.RESISTOR CH 1/10W 12K	2	
R765,66	ERJ6GEYG102	M.RESISTOR CH 1/10W 1K	2	
R767	ERJ6GEYG101	M.RESISTOR CH 1/10W 100	1	
R768	ERJ6GEYG394	M.RESISTOR CH 1/10W 390K	1	
R769	ERJ6GEYJ274	M.RESISTOR CH 1/10W 270K	1	
R770,71	ERJ6GEYG105	M.RESISTOR CH 1/10W 1M	2	
R772	ERJ6GEYG101	M.RESISTOR CH 1/10W 100	1	
R773	ERJ6GEYG103	M.RESISTOR CH 1/10W 10K	1	
R774	ERJ6GEYG222	M.RESISTOR CH 1/10W 2.2K	1	
R775	ERJ6GEYG272	M.RESISTOR CH 1/10W 2.7K	1	
R776	ERJ6GEYG471	M.RESISTOR CH 1/10W 470	1	
R777	ERJ6GEYG152	M.RESISTOR CH 1/10W 1.5K	1	
R778	ERJ6GEYF561	M.RESISTOR CH 1/10W 560	1	
R779	ERJ6GEYG152	M.RESISTOR CH 1/10W 1.5K	1	
R780	ERJ6GEYF561	M.RESISTOR CH 1/10W 560	1	
R781	ERJ6GEYG682	M.REISITOR CH 1/10W 6.8K	1	
R782	ERJ6GEYG273	M.RESISTOR CH 1/10W 27K	1	
R783	ERJ6GEYG272	M.RESISTOR CH 1/10W 2.7K	1	
R784-91	ERJ6GEYG102	M.RESISTOR CH 1/10W 1K	8	
R801	ERJ6GEYG103	M.RESISTOR CH 1/10W 10K	1	
R802	ERJ6GEYG152	M.RESISTOR CH 1/10W 1.5K	1	
R803	ERJ6GEYG471	M.RESISTOR CH 1/10W 470	1	
R804	ERJ6GEYG152	M.RESISTOR CH 1/10W 1.5K	1	
R807	ERJ6GEYG101	M.RESISTOR CH 1/10W 100	1	
R808	ERJ6GEYG391	M.RESISTOR CH 1/10W 390	1	
R811	ERJ6GEYG122	M.RESISTOR CH 1/10W 1.2K	1	
R812	ERJ6GEYG101	M.RESISTOR CH 1/10W 100	1	
R813,14	ERJ6GEYF123	M.RESISTOR CH 1/10W 12K	2	
R815,16	ERJ6GEYG102	M.RESISTOR CH 1/10W 1K	2	
R817	ERJ6GEYG101	M.RESISTOR CH 1/10W 100	1	
R818	ERJ6GEYG394	M.RESISTOR CH 1/10W 390K	1	
R819	ERJ6GEYJ274	M.RESISTOR CH 1/10W 270K	1	
R820,21	ERJ6GEYG105	M.RESISTOR CH 1/10W 1M	2	
R822	ERJ6GEYG101	M.RESISTOR CH 1/10W 100	1	
R823	ERJ6GEYG103	M.RESISTOR CH 1/10W 10K	1	
R824	ERJ6GEYG222	M.RESISTOR CH 1/10W 2.2K	1	
R825	ERJ6GEYG272	M.RESISTOR CH 1/10W 2.7K	1	
R826	ERJ6GEYG471	M.RESISTOR CH 1/10W 470	1	
R827	ERJ6GEYG152	M.RESISTOR CH 1/10W 1.5K	1	
R828	ERJ6GEYF561	M.RESISTOR CH 1/10W 560	1	
R829	ERJ6GEYG152	M.RESISTOR CH 1/10W 1.5K	1	
R830	ERJ6GEYF561	M.RESISTOR CH 1/10W 560	1	
R831	ERJ6GEYG682	M.REISITOR CH 1/10W 6.8K	1	
R832	ERJ6GEYG273	M.RESISTOR CH 1/10W 27K	1	
R833	ERJ6GEYG272	M.RESISTOR CH 1/10W 2.7K	1	
R834-41	ERJ6GEYG102	M.RESISTOR CH 1/10W 1K	8	
R854-57	ERJ6GEYG391	M.RESISTOR CH 1/10W 390	4	
R858	ERJ6GEYG332	M.RESISTOR CH 1/10W 3.3K	1	
R859-68	ERJ6GEYG391	M.RESISTOR CH 1/10W 390	10	
R869	ERJ6GEYG332	M.RESISTOR CH 1/10W 3.3K	1	
R872	ERJ6GEY0R00	M.RESISTOR CH 1/10W 0	1	
R875	ERJ6GEYG103	M.RESISTOR CH 1/10W 10K	1	
R901-03	ERJ6GEYG101	M.RESISTOR CH 1/10W 100	3	
R911-13	ERJ6GEYG470	M.RESISTOR CH 1/10W 47	3	
R914	ERJ6GEYG101	M.RESISTOR CH 1/10W 100	1	
R916	ERJ6GEYG101	M.RESISTOR CH 1/10W 100	1	
R917,18	ERJ6GEYG103	M.RESISTOR CH 1/10W 10K	2	
R919	ERJ6GEYG101	M.RESISTOR CH 1/10W 100	1	
R920	ERJ6GEYG103	M.RESISTOR CH 1/10W 10K	1	
R921	ERJ6GEYG101	M.RESISTOR CH 1/10W 100	1	
R923	ERJ6GEYG105	M.RESISTOR CH 1/10W 1M	1	

Ref.No.	Part No.	Part Name & Description	Pcs	Remarks
R948,49	ERJ6GEYG103	M.RESISTOR CH 1/10W 10K	2	
R950	ERJ6GEYG222	M.RESISTOR CH 1/10W 2.2K	1	
R951	ERJ6GEYG101	M.RESISTOR CH 1/10W 100	1	
R952	ERJ6GEYG222	M.RESISTOR CH 1/10W 2.2K	1	
R953	ERJ6GEYG102	M.RESISTOR CH 1/10W 1K	1	
R954	ERJ6GEYG152	M.RESISTOR CH 1/10W 1.5K	1	
R955	ERJ6GEYG470	M.RESISTOR CH 1/10W 47	1	
R956	ERJ6GEYG152	M.RESISTOR CH 1/10W 1.5K	1	
R957	ERJ6GEYG681	M.RESISTOR CH 1/10W 680	1	
R958	ERJ6GEYG470	M.RESISTOR CH 1/10W 47	1	
R959	ERJ6GEYG102	M.RESISTOR CH 1/10W 1K	1	
R960	ERJ6GEYF472	M.RESISTOR CH 1/10W 4.7K	1	
R961	ERJ6GEYG101	M.RESISTOR CH 1/10W 100	1	
R962,63	ERJ6GEYG103	M.RESISTOR CH 1/10W 10K	2	
R965	ERJ6GEYJ274	M.RESISTOR CH 1/10W 270K	1	
R966	ERJ6GEY0R00	M.RESISTOR CH 1/10W 0	1	
R970	ERJ6GEYG103	M.RESISTOR CH 1/10W 10K	1	
R973,74	ERJ6GEYG103	M.RESISTOR CH 1/10W 10K	2	
R975,76	ERJ6GEYG332	M.RESISTOR CH 1/10W 3.3K	2	
R977,78	ERJ6GEY0R00	M.RESISTOR CH 1/10W 0	2	
R979	ERJ6GEYG272	M.RESISTOR CH 1/10W 2.7K	1	
R980	ERJ6GEYG101	M.RESISTOR CH 1/10W 100	1	
R981	ERJ6GEYG103	M.RESISTOR CH 1/10W 10K	1	
R982	ERJ6GEYG101	M.RESISTOR CH 1/10W 100	1	
R983	ERJ6GEYG394	M.RESISTOR CH 1/10W 390K	1	
R984	ERJ6GEYG103	M.RESISTOR CH 1/10W 10K	1	
R985	ERJ6GEYF472	M.RESISTOR CH 1/10W 4.7K	1	
R986,87	ERJ6GEYG103	M.RESISTOR CH 1/10W 10K	2	
R988	ERJ6GEYG563	M.RESISTOR CH 1/10W 56K	1	
R989	ERJ6GEYF561	M.RESISTOR CH 1/10W 560	1	
R990	ERJ6GEYG102	M.RESISTOR CH 1/10W 1K	1	
R991	ERJ6GEY0R00	M.RESISTOR CH 1/10W 0	1	
R992	ERJ6GEYG101	M.RESISTOR CH 1/10W 100	1	
VL601	VLQ0415	COIL	1	
VR301	EVMEGSA00B53	V.RESISTOR 5K	1	
VR351	EVMEGSA00B53	V.RESISTOR 5K	1	
VR451	EVMEGSA00B12	V.RESISTOR 100	1	
VR455	EVMEGSA00B52	V.RESISTOR 500	1	
VR501	EVMEGSA00B53	V.RESISTOR 5K	1	
VR502	EVMEGSA00B13	V.RESISTOR 1K	1	
VR505	EVMEGSA00B13	V.RESISTOR 1K	1	
VR507	EVMEGSA00B13	V.RESISTOR 1K	1	
VR510,11	EVMEGSA00B13	V.RESISTOR 1K	2	
VR512	EVMEGSA00B53	V.RESISTOR 5K	1	
VR601	EVMEGSA00B23	V.RESISTOR 2K	1	
VR602	EVMEGSA00B53	V.RESISTOR 5K	1	
VR701	EVMEGSA00B13	V.RESISTOR 1K	1	
VR702	EVMEGSA00B53	V.RESISTOR 5K	1	
VR703	EVMEGSA00B13	V.RESISTOR 1K	1	
VR704	EVMEGSA00B14	V.RESISTOR 10K	1	
VR751	EVMEGSA00B13	V.RESISTOR 1K	1	
VR752	EVMEGSA00B53	V.RESISTOR 5K	1	
VR753	EVMEGSA00B13	V.RESISTOR 1K	1	
VR754	EVMEGSA00B53	V.RESISTOR 5K	1	
VR801	EVMEGSA00B13	V.RESISTOR 1K	1	
VR802	EVMEGSA00B53	V.RESISTOR 5K	1	
VR803	EVMEGSA00B13	V.RESISTOR 1K	1	
VR804	EVMEGSA00B53	V.RESISTOR 5K	1	
VR951	EVMEGSA00B23	V.RESISTOR 2K	1	
VR952	EVMEGSA00B52	V.RESISTOR 500	1	
X402	VSX0330	CRYSTAL OSCILLATOR	1	
X501	VSX0338	CRYSTAL OSCILLATOR	1	
		MISCELLANEOUS		
	VML2143	CARD PULLER	1	
	VML2144	CARD PULLER	1	

Ref.No.	Part No.	Part Name & Description	Pcs	Remarks

Ref.No.	Part No.	Part Name & Description	Pcs	Remarks
■ E6	VEP83449A	F6 VIDEO IN P.C.BOARD	1	(RTL)FOR AJ-D850E
C51-54	ECUM1E104ZFN	C.CAPACITOR CH 25V 0.1U	4	
C55	ECEV1CV470Q	E.CAPACITOR CH 16V 47U	1	
C56	ECEV0JV330Q	E.CAPACITOR CH6.3V 33U	1	
C57	ECEV1CV470Q	E.CAPACITOR CH 16V 47U	1	
C58-64	ECUM1E104ZFN	C.CAPACITOR CH 25V 0.1U	7	
C65	ECEV1CV470Q	E.CAPACITOR CH 16V 47U	1	
C66	ECEV0JV330Q	E.CAPACITOR CH6.3V 33U	1	
C67	ECEV1CV470Q	E.CAPACITOR CH 16V 47U	1	
C68-70	ECUM1E104ZFN	C.CAPACITOR CH 25V 0.1U	3	
C101-08	ECUM1E104ZFN	C.CAPACITOR CH 25V 0.1U	8	
C110	ECUM1E104ZFN	C.CAPACITOR CH 25V 0.1U	1	
C111	ECUM1H101JCN	C.CAPACITOR CH 50V 100P	1	
C112	ECUM1H271JCN	C.CAPACITOR CH 50V 270P	1	
C114	ECCF1H101JC	C.CAPACITOR 50V 100P	1	
C131,32	ECUM1H101JCN	C.CAPACITOR CH 50V 100P	2	
C151-59	ECUM1E104ZFN	C.CAPACITOR CH 25V 0.1U	9	
C160	ECUM1H103KBN	C.CAPACITOR CH 50V 0.01U	1	
C162	ECUM1E104ZFN	C.CAPACITOR CH 25V 0.1U	1	
C201-04	ECUM1E104ZFN	C.CAPACITOR CH 25V 0.1U	4	
C212,13	ECUM1E104ZFN	C.CAPACITOR CH 25V 0.1U	2	
C215	ECUM1E104ZFN	C.CAPACITOR CH 25V 0.1U	1	
C251-54	ECEV1CV100Q	E.CAPACITOR CH 16V 10U	4	
C255-60	ECUM1E104ZFN	C.CAPACITOR CH 25V 0.1U	6	
C261	ECUX1E104KBN	C.CAPACITOR CH 25V 0.1U	1	
C262,63	ECUM1E104ZFN	C.CAPACITOR CH 25V 0.1U	2	
C264	ECEV1EV4R7Q	E.CAPACITOR CH 25V 4.7U	1	
C265-68	ECUM1E104ZFN	C.CAPACITOR CH 25V 0.1U	4	
C269,70	ECEV0JV330Q	E.CAPACITOR CH6.3V 33U	2	
C271-76	ECUM1E104ZFN	C.CAPACITOR CH 25V 0.1U	6	
C277	ECUM1H390JCN	C.CAPACITOR CH 50V 39P	1	
C278	ECUM1H181JCN	C.CAPACITOR CH 50V 180P	1	
C279,80	ECUM1E104ZFN	C.CAPACITOR CH 25V 0.1U	2	
C281	ECUM1H080DCN	C.CAPACITOR CH 50V 8P	1	
C283	ECEV1CV470Q	E.CAPACITOR CH 16V 47U	1	
C284	ECUM1E104ZFN	C.CAPACITOR CH 25V 0.1U	1	
C285	ECEV0JV330Q	E.CAPACITOR CH6.3V 33U	1	
C286	ECUM1H103KBN	C.CAPACITOR CH 50V 0.01U	1	
C287	ECUM1H820JCN	C.CAPACITOR CH 50V 82P	1	
C288,89	ECUM1H103KBN	C.CAPACITOR CH 50V 0.01U	2	
C292	ECUM1H101JCN	C.CAPACITOR CH 50V 100P	1	
C301,02	ECUM1E104ZFN	C.CAPACITOR CH 25V 0.1U	2	
C303-06	ECEV0JV330Q	E.CAPACITOR CH6.3V 33U	4	
C307	ECEV1CV470Q	E.CAPACITOR CH 16V 47U	1	
C308-11	ECUM1E104ZFN	C.CAPACITOR CH 25V 0.1U	4	
C312	ECUM1H470JCN	C.CAPACITOR CH 50V 47P	1	
C313	ECUM1E104ZFN	C.CAPACITOR CH 25V 0.1U	1	
C315	ECUM1E104KBN	C.CAPACITOR CH 25V 0.1U	1	
C317-21	ECUM1E104ZFN	C.CAPACITOR CH 25V 0.1U	5	
C322	ECUM1H180JCN	C.CAPACITOR CH 50V 18P	1	
C324-26	ECUM1E104ZFN	C.CAPACITOR CH 25V 0.1U	3	
C327	ECEV0JV330Q	E.CAPACITOR CH6.3V 33U	1	
C328,29	ECUM1E104ZFN	C.CAPACITOR CH 25V 0.1U	2	
C330	ECEV0JV330Q	E.CAPACITOR CH6.3V 33U	1	
C331-33	ECUM1E104ZFN	C.CAPACITOR CH 25V 0.1U	3	
C334	ECUM1H271JCN	C.CAPACITOR CH 50V 270P	1	
C351-54	ECUM1E104ZFN	C.CAPACITOR CH 25V 0.1U	4	
C355-57	ECEV0JV330Q	E.CAPACITOR CH6.3V 33U	3	
C358-61	ECUM1E104ZFN	C.CAPACITOR CH 25V 0.1U	4	
C363,64	ECUM1E104ZFN	C.CAPACITOR CH 25V 0.1U	2	
C365,66	ECEV0JV330Q	E.CAPACITOR CH6.3V 33U	2	
C368-76	ECUM1E104ZFN	C.CAPACITOR CH 25V 0.1U	9	
C378	ECUX1E104KBN	C.CAPACITOR CH 25V 0.1U	1	
C380	ECUM1H390JCN	C.CAPACITOR CH 50V 39P	1	
C381	ECUX1E104KBN	C.CAPACITOR CH 25V 0.1U	1	
C383	ECUM1H470JCN	C.CAPACITOR CH 50V 47P	1	
C386,87	ECUM1E104ZFN	C.CAPACITOR CH 25V 0.1U	2	
C389	ECUX1E104KBN	C.CAPACITOR CH 25V 0.1U	1	
C390,91	ECUM1E104ZFN	C.CAPACITOR CH 25V 0.1U	2	
C392	ECUM1H330JCN	C.CAPACITOR CH 50V 33P	1	
C393	ECUM1H271JCN	C.CAPACITOR CH 50V 270P	1	
C394	ECUM1H220JCN	C.CAPACITOR CH 50V 22P	1	

Ref.No.	Part No.	Part Name & Description	Pcs	Remarks
C395	ECUM1H680JCN	C.CAPACITOR CH 50V 68P	1	
C396	ECUM1H070DCN	C.CAPACITOR CH 50V 7P	1	
C397	ECUM1E104ZFN	C.CAPACITOR CH 25V 0.1U	1	
C398	ECUM1H121JCN	C.CAPACITOR CH 50V 120P	1	
C399	ECUM1H100DCN	C.CAPACITOR CH 50V 10P	1	
C400	ECUM1E104ZFN	C.CAPACITOR CH 25V 0.1U	1	
C401	ECUM1H100DCN	C.CAPACITOR CH 50V 10P	1	
C402	ECUM1H330JCN	C.CAPACITOR CH 50V 33P	1	
C403-05	ECUM1E104ZFN	C.CAPACITOR CH 25V 0.1U	3	
C406	ECUX1E104KBN	C.CAPACITOR CH 25V 0.1U	1	
C410-13	ECUM1E104ZFN	C.CAPACITOR CH 25V 0.1U	4	
C414	ECUM1H101JCN	C.CAPACITOR CH 50V 100P	1	
C415,16	ECUM1E104ZFN	C.CAPACITOR CH 25V 0.1U	2	
C417	ECEV1HV4R7Q	E.CAPACITOR CH 50V 4.7U	1	
C418-20	ECEV0JV330Q	E.CAPACITOR CH6.3V 33U	3	
C421-23	ECUM1E104ZFN	C.CAPACITOR CH 25V 0.1U	3	
C424	ECUM1H121JCN	C.CAPACITOR CH 50V 120P	1	
C425	ECUM1H271JCN	C.CAPACITOR CH 50V 270P	1	
C426	ECUM1E104ZFN	C.CAPACITOR CH 25V 0.1U	1	
C427,28	ECUM1H103KBN	C.CAPACITOR CH 50V 0.01U	2	
C429	ECUX1H102JCN	C.CAPACITOR CH 50V 1000P	1	
C430	ECUM1E104ZFN	C.CAPACITOR CH 25V 0.1U	1	
C431	ECUM1H271JCN	C.CAPACITOR CH 50V 270P	1	
C432	ECEV1HNR47Q	E.CAPACITOR CH 50V 0.47U	1	
C433	ECUM1E104ZFN	C.CAPACITOR CH 25V 0.1U	1	
C434	ECUX1H561JCN	C.CAPACITOR CH 50V 560P	1	
C435-39	ECUM1E104ZFN	C.CAPACITOR CH 25V 0.1U	5	
C442	ECUM1H070DCN	C.CAPACITOR CH 50V 7P	1	
C443	ECUM1H151JCN	C.CAPACITOR CH 50V 150P	1	
C451	ECEV0JV330Q	E.CAPACITOR CH6.3V 33U	1	
C452-55	ECEV1CV100Q	E.CAPACITOR CH 16V 10U	4	
C456-60	ECUM1E104ZFN	C.CAPACITOR CH 25V 0.1U	5	
C461-64	ECUX1E104KBN	C.CAPACITOR CH 25V 0.1U	4	
C465	ECUM1H270JCN	C.CAPACITOR CH 50V 27P	1	
C466-70	ECUM1E104ZFN	C.CAPACITOR CH 25V 0.1U	5	
C471,72	ECUM1H103KBN	C.CAPACITOR CH 50V 0.01U	2	
C473	ECUM1H220JCN	C.CAPACITOR CH 50V 22P	1	
C474	ECUM1E104ZFN	C.CAPACITOR CH 25V 0.1U	1	
C475	ECUM1H180JCN	C.CAPACITOR CH 50V 18P	1	
C476	ECEV1CV470Q	E.CAPACITOR CH 16V 47U	1	
C477	ECUM1H180JCN	C.CAPACITOR CH 50V 18P	1	
C478-80	ECEV1CV470Q	E.CAPACITOR CH 16V 47U	3	
C481,82	ECUM1H040CCN	C.CAPACITOR CH 50V 4P	2	
C483,84	ECUM1H103ZFN	C.CAPACITOR CH 50V 0.01U	2	
C485,86	ECUM1H680JCN	C.CAPACITOR CH 50V 68P	2	
C487-90	ECUM1H080DCN	C.CAPACITOR CH 50V 8P	4	
C491,92	ECUM1H103ZFN	C.CAPACITOR CH 50V 0.01U	2	
C493-96	ECUM1H470JCN	C.CAPACITOR CH 50V 47P	4	
C497-00	ECUM1H103ZFN	C.CAPACITOR CH 50V 0.01U	4	
C501,02	ECEV0JV330Q	E.CAPACITOR CH6.3V 33U	2	
C503-06	ECUM1H103ZFN	C.CAPACITOR CH 50V 0.01U	4	
C510	ECEV1CV470Q	E.CAPACITOR CH 16V 47U	1	
C511-15	ECUM1E104ZFN	C.CAPACITOR CH 25V 0.1U	5	
C516	ECUM1H270JCN	C.CAPACITOR CH 50V 27P	1	
C517	ECUM1H101JCN	C.CAPACITOR CH 50V 100P	1	
C518,19	ECUM1E104ZFN	C.CAPACITOR CH 25V 0.1U	2	
C520,21	ECEV0JV330Q	E.CAPACITOR CH6.3V 33U	2	
C524,25	ECUM1H103KBN	C.CAPACITOR CH 50V 0.01U	2	
C526	ECUM1H820JCN	C.CAPACITOR CH 50V 82P	1	
C527,28	ECUM1H103KBN	C.CAPACITOR CH 50V 0.01U	2	
C530	ECUM1H103KBN	C.CAPACITOR CH 50V 0.01U	1	
C531-34	ECUM1E104ZFN	C.CAPACITOR CH 25V 0.1U	4	
C535	ECEV0JV330Q	E.CAPACITOR CH6.3V 33U	1	
C536	ECUM1E683KBN	C.CAPACITOR CH 25V 0.063U	1	
C537	ECUM1H471JCN	C.CAPACITOR CH 50V 470P	1	
C538	ECEV1HV010Q	E.CAPACITOR CH 50V 1U	1	
C539	ECUM1E104ZFN	C.CAPACITOR CH 25V 0.1U	1	
C540	ECEV1HV4R7Q	E.CAPACITOR CH 50V 4.7U	1	
C541	ECUM1H821JCN	C.CAPACITOR CH 50V 820P	1	
C542	ECEV0JV330Q	E.CAPACITOR CH6.3V 33U	1	
C543	ECUX1H392KBN	C.CAPACITOR CH 50V 3900P	1	
C544	ECUM1H152KBN	C.CAPACITOR CH 50V 1500P	1	
C545	ECEV1HVR68Q	E.CAPACITOR CH 50V 0.68U	1	
C546	ECUM1E104ZFN	C.CAPACITOR CH 25V 0.1U	1	
C551,52	ECEV0JV330Q	E.CAPACITOR CH6.3V 33U	2	

Ref.No.	Part No.	Part Name & Description	Pcs	Remarks
C553	ECUM1H470JCN	C.CAPACITOR CH 50V 47P	1	
C554	ECUX1H102JCN	C.CAPACITOR CH 50V 1000P	1	
C555,56	ECUM1E104ZFN	C.CAPACITOR CH 25V 0.1U	2	
C557	ECUM1H470JCN	C.CAPACITOR CH 50V 47P	1	
C558,59	ECUM1E104ZFN	C.CAPACITOR CH 25V 0.1U	2	
C560	ECUM1H101JCN	C.CAPACITOR CH 50V 100P	1	
C561	ECUX1H102JCN	C.CAPACITOR CH 50V 1000P	1	
C562	ECUX1H681JCN	C.CAPACITOR CH 50V 680P	1	
C563	ECUM1E104ZFN	C.CAPACITOR CH 25V 0.1U	1	
C564	ECUM1H271JCN	C.CAPACITOR CH 50V 270P	1	
C565	ECUM1H471JCN	C.CAPACITOR CH 50V 470P	1	
C566	ECUM1E104ZFN	C.CAPACITOR CH 25V 0.1U	1	
C567	ECUM1H820JCN	C.CAPACITOR CH 50V 82P	1	
C568	ECUX1H102JCN	C.CAPACITOR CH 50V 1000P	1	
C569,70	ECUM1E104ZFN	C.CAPACITOR CH 25V 0.1U	2	
C571	ECUM1H103KBN	C.CAPACITOR CH 50V 0.01U	1	
C572	ECUM1E104ZFN	C.CAPACITOR CH 25V 0.1U	1	
C573	ECUM1H470JCN	C.CAPACITOR CH 50V 47P	1	
C576	ECUM1E104ZFN	C.CAPACITOR CH 25V 0.1U	1	
C578	ECUM1H103KBN	C.CAPACITOR CH 50V 0.01U	1	
C579,80	ECEV1HN010Q	E.CAPACITOR CH 50V 1U	2	
C581	ECUX1H102JCN	C.CAPACITOR CH 50V 1000P	1	
C601,02	ECEV0JV330Q	E.CAPACITOR CH6.3V 33U	2	
C603,04	ECUM1E104ZFN	C.CAPACITOR CH 25V 0.1U	2	
C651	ECEV0JV330Q	E.CAPACITOR CH6.3V 33U	1	
C652-54	ECUM1E104ZFN	C.CAPACITOR CH 25V 0.1U	3	
C655	ECEV0JV330Q	E.CAPACITOR CH6.3V 33U	1	
C656-58	ECUM1E104ZFN	C.CAPACITOR CH 25V 0.1U	3	
C659,60	ECEV0JV330Q	E.CAPACITOR CH6.3V 33U	2	
C661,62	ECUM1E104ZFN	C.CAPACITOR CH 25V 0.1U	2	
C663,64	ECEV0JV330Q	E.CAPACITOR CH6.3V 33U	2	
C665	ECUM1E104ZFN	C.CAPACITOR CH 25V 0.1U	1	
C666	ECEV1CV470Q	E.CAPACITOR CH 16V 47U	1	
C667	ECUM1E104ZFN	C.CAPACITOR CH 25V 0.1U	1	
C668,69	ECEV0JV330Q	E.CAPACITOR CH6.3V 33U	2	
C671	ECUM1H010CCN	C.CAPACITOR CH 50V 1P	1	
C672	ECUM1E104ZFN	C.CAPACITOR CH 25V 0.1U	1	
C673	ECUX1E104KBN	C.CAPACITOR CH 25V 0.1U	1	
C675	ECUM1E104ZFN	C.CAPACITOR CH 25V 0.1U	1	
C676	ECUX1E104KBN	C.CAPACITOR CH 25V 0.1U	1	
C677	ECUM1E104ZFN	C.CAPACITOR CH 25V 0.1U	1	
C678	ECUM1H331JCN	C.CAPACITOR CH 50V 330P	1	
C679	ECUM1H470JCN	C.CAPACITOR CH 50V 47P	1	
C680,81	ECUM1E104ZFN	C.CAPACITOR CH 25V 0.1U	2	
C682	ECEV0JV330Q	E.CAPACITOR CH6.3V 33U	1	
C683-85	ECUM1E104ZFN	C.CAPACITOR CH 25V 0.1U	3	
C686	ECEV0JV330Q	E.CAPACITOR CH6.3V 33U	1	
C687-89	ECUM1E104ZFN	C.CAPACITOR CH 25V 0.1U	3	
C701	ECEV0JV330Q	E.CAPACITOR CH6.3V 33U	1	
C702	ECEV1CV100Q	E.CAPACITOR CH 16V 10U	1	
C703-05	ECUM1E104ZFN	C.CAPACITOR CH 25V 0.1U	3	
C706	ECEV0JV330Q	E.CAPACITOR CH6.3V 33U	1	
C707-09	ECUM1E104ZFN	C.CAPACITOR CH 25V 0.1U	3	
C710,11	ECEV0JV330Q	E.CAPACITOR CH6.3V 33U	2	
C712	ECUM1H080DCN	C.CAPACITOR CH 50V 8P	1	
C713	ECUM1E104ZFN	C.CAPACITOR CH 25V 0.1U	1	
C714	ECUM1H470JCN	C.CAPACITOR CH 50V 47P	1	
C715	ECUM1E104ZFN	C.CAPACITOR CH 25V 0.1U	1	
C716,17	ECEV0JV330Q	E.CAPACITOR CH6.3V 33U	2	
C718	ECUM1E104ZFN	C.CAPACITOR CH 25V 0.1U	1	
C719	ECEV1CV470Q	E.CAPACITOR CH 16V 47U	1	
C720	ECUM1E104ZFN	C.CAPACITOR CH 25V 0.1U	1	
C721	ECEV1CV100Q	E.CAPACITOR CH 16V 10U	1	
C722	ECEV0JV330Q	E.CAPACITOR CH6.3V 33U	1	
C725	ECUM1E104ZFN	C.CAPACITOR CH 25V 0.1U	1	
C726	ECUX1E104KBN	C.CAPACITOR CH 25V 0.1U	1	
C728	ECUM1E104ZFN	C.CAPACITOR CH 25V 0.1U	1	
C729	ECUX1E104KBN	C.CAPACITOR CH 25V 0.1U	1	
C730	ECUM1E104ZFN	C.CAPACITOR CH 25V 0.1U	1	
C731	ECUM1H331JCN	C.CAPACITOR CH 50V 330P	1	
C732	ECUM1H470JCN	C.CAPACITOR CH 50V 47P	1	
C734	ECUM1E104ZFN	C.CAPACITOR CH 25V 0.1U	1	
C736	ECUM1E104ZFN	C.CAPACITOR CH 25V 0.1U	1	
C738	ECUM1E104ZFN	C.CAPACITOR CH 25V 0.1U	1	
C739	ECEV0JV330Q	E.CAPACITOR CH6.3V 33U	1	

Ref.No.	Part No.	Part Name & Description	Pcs	Remarks
C740-42	ECUM1E104ZFN	C.CAPACITOR CH 25V 0.1U	3	
C751	ECEV0JV330Q	E.CAPACITOR CH6.3V 33U	1	
C752	ECEV1CV100Q	E.CAPACITOR CH 16V 10U	1	
C753-55	ECUM1E104ZFN	C.CAPACITOR CH 25V 0.1U	3	
C756	ECEV0JV330Q	E.CAPACITOR CH6.3V 33U	1	
C757-59	ECUM1E104ZFN	C.CAPACITOR CH 25V 0.1U	3	
C760,61	ECEV0JV330Q	E.CAPACITOR CH6.3V 33U	2	
C762	ECUM1H080DCN	C.CAPACITOR CH 50V 8P	1	
C763	ECUM1E104ZFN	C.CAPACITOR CH 25V 0.1U	1	
C764	ECUM1H470JCN	C.CAPACITOR CH 50V 47P	1	
C765	ECUM1E104ZFN	C.CAPACITOR CH 25V 0.1U	1	
C766,67	ECEV0JV330Q	E.CAPACITOR CH6.3V 33U	2	
C768	ECUM1E104ZFN	C.CAPACITOR CH 25V 0.1U	1	
C769	ECEV1CV470Q	E.CAPACITOR CH 16V 47U	1	
C770	ECUM1E104ZFN	C.CAPACITOR CH 25V 0.1U	1	
C771	ECEV1CV100Q	E.CAPACITOR CH 16V 10U	1	
C772	ECEV0JV330Q	E.CAPACITOR CH6.3V 33U	1	
C775	ECUM1E104ZFN	C.CAPACITOR CH 25V 0.1U	1	
C776	ECUX1E104KBN	C.CAPACITOR CH 25V 0.1U	1	
C778	ECUM1E104ZFN	C.CAPACITOR CH 25V 0.1U	1	
C779	ECUX1E104KBN	C.CAPACITOR CH 25V 0.1U	1	
C780	ECUM1E104ZFN	C.CAPACITOR CH 25V 0.1U	1	
C781	ECUM1H331JCN	C.CAPACITOR CH 50V 330P	1	
C782	ECUM1H470JCN	C.CAPACITOR CH 50V 47P	1	
C784	ECUM1E104ZFN	C.CAPACITOR CH 25V 0.1U	1	
C786	ECUM1E104ZFN	C.CAPACITOR CH 25V 0.1U	1	
C788	ECUM1E104ZFN	C.CAPACITOR CH 25V 0.1U	1	
C789	ECEV0JV330Q	E.CAPACITOR CH6.3V 33U	1	
C790	ECUM1E104ZFN	C.CAPACITOR CH 25V 0.1U	1	
C792,93	ECUM1E104ZFN	C.CAPACITOR CH 25V 0.1U	2	
C801-10	ECUM1E104ZFN	C.CAPACITOR CH 25V 0.1U	10	
C853-55	ECUM1E104ZFN	C.CAPACITOR CH 25V 0.1U	3	
C856	ECUM1H330JCN	C.CAPACITOR CH 50V 33P	1	
C857	ECUM1H150JCN	C.CAPACITOR CH 50V 15P	1	
C858-73	ECUM1E104ZFN	C.CAPACITOR CH 25V 0.1U	16	
C901,02	ECUM1H104ZFN	C.CAPACITOR CH 50V 0.1U	2	
C903,04	ECEV0JV330Q	E.CAPACITOR CH6.3V 33U	2	
C905,06	ECUX1H223KBN	C.CAPACITOR CH 50V 0.22U	2	
C907	ECUM1H221JCN	C.CAPACITOR CH 50V 220P	1	
C908,09	ECUM1H050CCN	C.CAPACITOR CH 50V 5P	2	
C910	ECUM1H104ZFN	C.CAPACITOR CH 50V 0.1U	1	
C911	ECUM1H221JCN	C.CAPACITOR CH 50V 220P	1	
C912,13	ECUM1H104ZFN	C.CAPACITOR CH 50V 0.1U	2	
C957,58	ECUM1E104ZFN	C.CAPACITOR CH 25V 0.1U	2	
C959	ECEV0JV330Q	E.CAPACITOR CH6.3V 33U	1	
C960	ECEV1CV100Q	E.CAPACITOR CH 16V 10U	1	
C961,62	ECUM1E104ZFN	C.CAPACITOR CH 25V 0.1U	2	
C963	ECEV0JV330Q	E.CAPACITOR CH6.3V 33U	1	
C965	ECEV1EV4R7Q	E.CAPACITOR CH 25V 4.7U	1	
C966	ECUM1H470JCN	C.CAPACITOR CH 50V 47P	1	
C967	ECEV0JV330Q	E.CAPACITOR CH6.3V 33U	1	
C971,72	ECUM1E104ZFN	C.CAPACITOR CH 25V 0.1U	2	
C973	ECEV0JV330Q	E.CAPACITOR CH6.3V 33U	1	
C974,75	ECUM1E104ZFN	C.CAPACITOR CH 25V 0.1U	2	
C981-92	ECUM1E104ZFN	C.CAPACITOR CH 25V 0.1U	12	
D251,52	MA152K	DIODE	2	
D253	MA152WK	DIODE	1	
D301,02	MA152K	DIODE	2	
D451	MA152K	DIODE	1	
D501	MA152WK	DIODE	1	
D502	MA152K	DIODE	1	
D551	MA152K	DIODE	1	
D552	MA335	DIODE	1	
D553	MA152WA	DIODE	1	
D651,52	MA152K	DIODE	2	
D701,02	MA152K	DIODE	2	
D751,52	MA152K	DIODE	2	
FL51,52	VLF1016A223	FILTER	2	
FL251	VLF1294	FILTER	1	
FL301	VLF1016A223	FILTER	1	
FL351	VLF1016A223	FILTER	1	
FL551,52	VLF1016A223	FILTER	2	
FL651	VLF1294	FILTER	1	

Ref.No.	Part No.	Part Name & Description	Pcs	Remarks
FL652	VLF1016A223	FILTER	1	
FL701	VLF1295	FILTER	1	
FL751	VLF1295	FILTER	1	
FL801,02	VLF1016A223	FILTER	2	
FL851,52	VLF1016A223	FILTER	2	
FL901	VLF1016A223	FILTER	1	
FL951	VLF1015	FILTER	1	
FL981,82	VLF1016A223	FILTER	2	
IC51	AN78N09	IC	1	
IC52	AN78N05	IC	1	
IC53	AN79N09	IC	1	
IC54	AN79N05	IC	1	
IC101-03	MC10H125M	IC	3	
IC107	MC10H125M	IC	1	
IC110	74F244SJ	IC	1	
IC151,52	SN74S1051NS	IC	2	
IC153	EPM7128STC15	IC	1	
IC156	74F245SJ	IC	1	
IC164,65	UPD71055GB	IC	2	
IC201	EPM7128STC15	IC	1	
IC203	T74HCT541AF	IC	1	
IC204	T74HCT374AF	IC	1	
IC210	T74HCT374AF	IC	1	
IC251	DAC10GS	IC	1	
IC252	NJM082BM	IC	1	
IC254	EL2082CS	IC	1	
IC255	NJM78L05UA	IC	1	
IC256	NJM79L05UA	IC	1	
IC257	TC4W53F	IC	1	
IC258	AN91A12S	IC	1	
IC259	MC74HC00AF	IC	1	
IC301	NJM79L05UA	IC	1	
IC302	NJM78L05UA	IC	1	
IC303	NJM084M	IC	1	
IC304	AD818AR	IC	1	
IC308	CXD1175AM	IC	1	
IC309	NJM78L05UA	IC	1	
IC351,52	NJM78L05UA	IC	2	
IC353	NJM79L05UA	IC	1	
IC354	CXD2105AQ	IC	1	
IC355	AD8047AR	IC	1	
IC356	MC74HC4053F	IC	1	
IC357,58	AD8047AR	IC	2	
IC359	MC74HC4053F	IC	1	
IC401	SN74LS221NS	IC	1	
IC402,03	MM74HC221AM	IC	2	
IC404	MC74HC04AF	IC	1	
IC406	NJM78L05UA	IC	1	
IC407	NJM79L05UA	IC	1	
IC410	NJM082BM	IC	1	
IC414	MC74HC4053F	IC	1	
IC418	NJM082BM	IC	1	
IC419	MC74HC4053F	IC	1	
IC423	NJM082BM	IC	1	
IC428	UPD65013BC16	IC	1	
IC451	NJM319M	IC	1	
IC452,53	NJM1496M	IC	2	
IC455,56	MC74HC4053F	IC	2	
IC459	NJM78L05UA	IC	1	
IC460	NJM79L05UA	IC	1	
IC501	NJM78L05UA	IC	1	
IC502	NJM79L05UA	IC	1	
IC503	AN91A12S	IC	1	
IC504	MC14538BF	IC	1	
IC505	AN3296S	IC	1	
IC506	NJM78L05UA	IC	1	
IC507	MN53015VZW	IC	1	
IC551	MC74HC00AF	IC	1	
IC552	TC4S584F	IC	1	
IC554	MC74HC74AF	IC	1	
IC557	SN74LS221NS	IC	1	
IC560	NJM082BM	IC	1	
IC561	TC4W53F	IC	1	
IC562	SN74LS221NS	IC	1	

Ref.No.	Part No.	Part Name & Description	Pcs	Remarks
IC567	MC74HC244AF	IC	1	
IC651	NJM78L05UA	IC	1	
IC652	NJM79L05UA	IC	1	
IC653	MC74HC4053F	IC	1	
IC655	NJM084M	IC	1	
IC656	AD848JR	IC	1	
IC660	CXD1175AM	IC	1	
IC661	NJM78L05UA	IC	1	
IC701	NJM78L05UA	IC	1	
IC702	NJM79L05UA	IC	1	
IC703	MC74HC4053F	IC	1	
IC705	NJM084M	IC	1	
IC706	AD848JR	IC	1	
IC710	MB40568PF	IC	1	
IC711	NJM78L05UA	IC	1	
IC712	AN78N09	IC	1	
IC713	T74HCT541AF	IC	1	
IC751	NJM78L05UA	IC	1	
IC752	NJM79L05UA	IC	1	
IC753	MC74HC4053F	IC	1	
IC755	NJM084M	IC	1	
IC756	AD848JR	IC	1	
IC760	MB40568PF	IC	1	
IC761	NJM78L05UA	IC	1	
IC762	AN78N09	IC	1	
IC763	T74HCT541AF	IC	1	
IC801	UPD42280G3	IC	1	
IC802	T160G70-1601	IC	1	
IC803	UPD42280G3	IC	1	
IC853	74F244SJ	IC	1	
IC854	CG25123-5106	IC	1	
IC855,56	CY7C19920ZC	IC	2	
IC857,58	74F244SJ	IC	2	
IC859,60	UPD42280G3	IC	2	
IC861,62	74F244SJ	IC	2	
IC901	NJM78L05UA	IC	1	
IC902	CF72417	IC	1	
IC903	TC7W125FU	IC	1	
IC954	MB40768PF	IC	1	
IC955,56	NJM78L05UA	IC	2	
IC957	NJM79L05UA	IC	1	
IC958	AD8047AR	IC	1	
IC959	MC74HC4053F	IC	1	
IC981	T160G70-1601	IC	1	
IC982,83	UPD42280G3	IC	2	
IC985,86	74F244SJ	IC	2	
L1,L2	VLP0133	COIL	2	
L51,52	VLP0133	COIL	2	
L251-54	VLQ0319K101	COIL 100UH	4	
L255	VLQ0133J471	COIL 470UH	1	
L256	VLQ0319K101	COIL 100UH	1	
L301,02	VLQ0319K101	COIL 100UH	2	
L351,52	VLQ0319K101	COIL 100UH	2	
L354	VLQ0163J270	COIL 27UH	1	
L355	VLQ0163J6R8	COIL 6.8UH	1	
L356	VLQ0163J5R6	COIL 5.6UH	1	
L401	VLQ0319K101	COIL 100UH	1	
L451-55	VLQ0319K101	COIL 100UH	5	
L456	VLQ0163J470	COIL 47UH	1	
L457,58	VLQ0163J560	COIL 56UH	2	
L501	VLQ0133J391	COIL 390UH	1	
L551	VLQ0163J3R3	COIL 3.3UH	1	
L601,02	VLQ0319K101	COIL 100UH	2	
L651	VLQ0133J821	COIL 820UH	1	
L652	VLQ0319K101	COIL 100UH	1	
L701	VLQ0133J821	COIL 820UH	1	
L751	VLQ0133J821	COIL 820UH	1	
L901	VLQ0319K101	COIL 100UH	1	
P1,P2	VJP3454B096	CONNECTOR (MALE)	2	
P41	VJP1246T	CONNECTOR (MALE) 6P	1	
Q251	2SB709A-R	TRANSISTOR	1	
Q252,53	2SD601A-R	TRANSISTOR	2	

Ref.No.	Part No.	Part Name & Description	Pcs	Remarks
Q301	2SB709A-R	TRANSISTOR	1	
Q302	2SD601A-R	TRANSISTOR	1	
Q303	2SK198-R	TRANSISTOR	1	
Q351	2SD601A-R	TRANSISTOR	1	
Q352	2SB709A-R	TRANSISTOR	1	
Q401,02	2SD601A-R	TRANSISTOR	2	
Q451-54	2SD601A-R	TRANSISTOR	4	
Q455-58	2SB709A-R	TRANSISTOR	4	
Q459-67	2SD601A-R	TRANSISTOR	9	
Q501,02	2SD601A-R	TRANSISTOR	2	
Q551	2SC3757-R	TRANSISTOR	1	
Q552,53	2SA1226E34	TRANSISTOR	2	
Q554	2SC3757-R	TRANSISTOR	1	
Q601-03	2SB709A-R	TRANSISTOR	3	
Q606-08	2SD601A-R	TRANSISTOR	3	
Q651	2SD601A-R	TRANSISTOR	1	
Q652-54	2SB709A-R	TRANSISTOR	3	
Q655	2SD601A-R	TRANSISTOR	1	
Q656	2SK198-R	TRANSISTOR	1	
Q657	2SD601A-R	TRANSISTOR	1	
Q701	2SD601A-R	TRANSISTOR	1	
Q702	2SB709A-R	TRANSISTOR	1	
Q703	2SD601A-R	TRANSISTOR	1	
Q704	2SB709A-R	TRANSISTOR	1	
Q705	2SD601A-R	TRANSISTOR	1	
Q706	2SK198-R	TRANSISTOR	1	
Q751	2SD601A-R	TRANSISTOR	1	
Q752	2SB709A-R	TRANSISTOR	1	
Q753	2SD601A-R	TRANSISTOR	1	
Q754	2SB709A-R	TRANSISTOR	1	
Q755	2SD601A-R	TRANSISTOR	1	
Q756	2SK198-R	TRANSISTOR	1	
Q951	2SD601A-R	TRANSISTOR	1	
Q952	2SB709A-R	TRANSISTOR	1	
Q953	2SD601A-R	TRANSISTOR	1	
Q954	2SB709A-R	TRANSISTOR	1	
QR151	MUN2212	TRANSISTOR-RESISTOR	1	
QR501	MUN2212	TRANSISTOR-RESISTOR	1	
R2-R8	ERJ6GEY0R00	M.RESISTOR CH 1/10W 0	7	
R10-22	ERJ6GEY0R00	M.RESISTOR CH 1/10W 0	13	
R24-75	ERJ6GEY0R00	M.RESISTOR CH 1/10W 0	52	
R101-12	ERJ6GEYG101	M.RESISTOR CH 1/10W 100	12	
R113	ERJ6GEY0R00	M.RESISTOR CH 1/10W 0	1	
R115,16	ERJ6GEYG101	M.RESISTOR CH 1/10W 100	2	
R118,19	ERJ6GEYG103	M.RESISTOR CH 1/10W 10K	2	
R120	ERJ6GEY0R00	M.RESISTOR CH 1/10W 0	1	
R131	ERJ6GEYG223	M.RESISTOR CH 1/10W 22K	1	
R132	ERJ6GEYF333	M.RESISTOR CH 1/10W 33K	1	
R133	ERJ6GEYG564	M.RESISTOR CH 1/10W 560K	1	
R134	ERJ6GEYG102	M.RESISTOR CH 1/10W 1K	1	
R135	ERJ6GEYG683	M.RESISTOR CH 1/10W 68K	1	
R136	ERJ6GEYG331	M.RESISTOR CH 1/10W 330	1	
R137	ERJ6GEYJ684	M.RESISTOR CH 1/10W 680K	1	
R138	ERJ6GEYG753	M.RESISTOR CH 1/10W 75	1	
R139	ERJ6GEYG104	M.RESISTOR CH 1/10W 100K	1	
R140	ERJ6GEYG103	M.RESISTOR CH 1/10W 10K	1	
R141	ERJ6GEYG682	M.REISITOR CH 1/10W 6.8K	1	
R142	ERJ6GEYG153	M.RESISTOR CH 1/10W 15K	1	
R143	ERJ6GEYF473	M.RESISTOR CH 1/10W 47K	1	
R146,47	ERJ6GEYG101	M.RESISTOR CH 1/10W 100	2	
R152-54	ERJ6GEYG470	M.RESISTOR CH 1/10W 47	3	
R159,60	ERJ6GEYG103	M.RESISTOR CH 1/10W 10K	2	
R163,64	ERJ6GEY0R00	M.RESISTOR CH 1/10W 0	2	
R165-68	ERJ6GEYG102	M.RESISTOR CH 1/10W 1K	4	
R170	ERJ6GEY0R00	M.RESISTOR CH 1/10W 0	1	
R172	ERJ6GEYG103	M.RESISTOR CH 1/10W 10K	1	
R173	ERJ6GEY0R00	M.RESISTOR CH 1/10W 0	1	
R175,76	ERJ6GEY0R00	M.RESISTOR CH 1/10W 0	2	
R177-79	ERJ6GEYG391	M.RESISTOR CH 1/10W 390	3	
R180	ERJ6GEYG332	M.RESISTOR CH 1/10W 3.3K	1	
R181-91	ERJ6GEYG391	M.RESISTOR CH 1/10W 390	11	
R192	ERJ6GEYG332	M.RESISTOR CH 1/10W 3.3K	1	
R193,94	ERJ6GEYG101	M.RESISTOR CH 1/10W 100	2	

Ref.No.	Part No.	Part Name & Description	Pcs	Remarks
R217-20	ERJ6GEYG101	M.RESISTOR CH 1/10W 100	4	
R251	ERJ6GEYG183	M.RESISTOR CH 1/10W 18K	1	
R252	ERJ6GEY0R00	M.RESISTOR CH 1/10W 0	1	
R253	ERJ6GEYG562	M.RESISTOR CH 1/10W 5.6K	1	
R254	ERJ6GEYG102	M.RESISTOR CH 1/10W 1K	1	
R255	ERJ6GEYG101	M.RESISTOR CH 1/10W 100	1	
R256	ERJ6GEYG331	M.RESISTOR CH 1/10W 330	1	
R257	ERJ6GEYG102	M.RESISTOR CH 1/10W 1K	1	
R258,59	ERJ6GEYF822	M.RESISTOR CH 1/10W 8.2K	2	
R260	ERJ6GEYG101	M.RESISTOR CH 1/10W 100	1	
R261	ERJ6GEYG331	M.RESISTOR CH 1/10W 330	1	
R262,63	ERJ6GEYG102	M.RESISTOR CH 1/10W 1K	2	
R264	ERJ6GEYF561	M.RESISTOR CH 1/10W 560	1	
R265	ERJ6GEYG102	M.RESISTOR CH 1/10W 1K	1	
R266	ERJ6GEYG222	M.RESISTOR CH 1/10W 2.2K	1	
R269	ERJ6GEYJ224	M.RESISTOR CH 1/10W 220K	1	
R270	ERJ6GEYJ684	M.RESISTOR CH 1/10W 680K	1	
R271-73	ERJ6GEYG103	M.RESISTOR CH 1/10W 10K	3	
R274	ERJ6GEY0R00	M.RESISTOR CH 1/10W 0	1	
R275	ERJ6GEYF333	M.RESISTOR CH 1/10W 33K	1	
R276	ERJ6GEYG562	M.RESISTOR CH 1/10W 5.6K	1	
R277	ERJ6GEYG392	M.RESISTOR CH 1/10W 3.9K	1	
R301	ERJ6GEYG394	M.RESISTOR CH 1/10W 390K	1	
R302	ERJ6GEYG154	M.RESISTOR CH 1/10W 150K	1	
R303	ERJ6GEYF561	M.RESISTOR CH 1/10W 560	1	
R304	ERJ6GEYG220	M.RESISTOR CH 1/10W 22	1	
R305	ERJ6GEYG102	M.RESISTOR CH 1/10W 1K	1	
R307	ERJ6GEYG152	M.RESISTOR CH 1/10W 1.5K	1	
R308	ERJ6GEYG122	M.RESISTOR CH 1/10W 1.2K	1	
R309,10	ERJ6GEYG101	M.RESISTOR CH 1/10W 100	2	
R311	ERJ6GEYG102	M.RESISTOR CH 1/10W 1K	1	
R313,14	ERJ6GEYG101	M.RESISTOR CH 1/10W 100	2	
R316,17	ERJ6GEYG103	M.RESISTOR CH 1/10W 10K	2	
R318	ERJ6GEY0R00	M.RESISTOR CH 1/10W 0	1	
R319	ERJ6GEYG682	M.REISITOR CH 1/10W 6.8K	1	
R353	ERJ6GEYG332	M.RESISTOR CH 1/10W 3.3K	1	
R354	ERJ6GEYG331	M.RESISTOR CH 1/10W 330	1	
R355	ERJ6GEYG121	M.RESISTOR CH 1/10W 120	1	
R356	ERJ6GEYG332	M.RESISTOR CH 1/10W 3.3K	1	
R357	ERJ6GEYG560	M.RESISTOR CH 1/10W 56	1	
R358	ERJ6GEYG101	M.RESISTOR CH 1/10W 100	1	
R359	ERJ6GEYG681	M.RESISTOR CH 1/10W 680	1	
R360	ERJ6GEYF561	M.RESISTOR CH 1/10W 560	1	
R362	ERJ6GEYG560	M.RESISTOR CH 1/10W 56	1	
R363	ERJ6GEYG101	M.RESISTOR CH 1/10W 100	1	
R365	ERJ6GEYG103	M.RESISTOR CH 1/10W 10K	1	
R366	ERJ6GEYG221	M.RESISTOR CH 1/10W 220	1	
R367	ERJ6GEYG103	M.RESISTOR CH 1/10W 10K	1	
R368	ERJ6GEYG391	M.RESISTOR CH 1/10W 390	1	
R369	ERJ6GEYG681	M.RESISTOR CH 1/10W 680	1	
R370	ERJ6GEYG101	M.RESISTOR CH 1/10W 100	1	
R371	ERJ6GEYG103	M.RESISTOR CH 1/10W 10K	1	
R373	ERJ6GEYG821	M.RESISTOR CH 1/10W 820	1	
R375	ERJ6GEYG391	M.RESISTOR CH 1/10W 390	1	
R376	ERJ6GEYG101	M.RESISTOR CH 1/10W 100	1	
R377	ERJ6GEYG681	M.RESISTOR CH 1/10W 680	1	
R379	ERJ6GEYG331	M.RESISTOR CH 1/10W 330	1	
R380	ERJ6GEYG102	M.RESISTOR CH 1/10W 1K	1	
R381,82	ERJ6GEYG101	M.RESISTOR CH 1/10W 100	2	
R384	ERJ6GEYG331	M.RESISTOR CH 1/10W 330	1	
R385	ERJ6GEYG102	M.RESISTOR CH 1/10W 1K	1	
R386	ERJ6GEYG101	M.RESISTOR CH 1/10W 100	1	
R387	ERJ6GEY0R00	M.RESISTOR CH 1/10W 0	1	
R390	ERJ6GEY0R00	M.RESISTOR CH 1/10W 0	1	
R393,94	ERJ6GEY0R00	M.RESISTOR CH 1/10W 0	2	
R395	ERJ6GEYG331	M.RESISTOR CH 1/10W 330	1	
R401	ERJ6GEYG103	M.RESISTOR CH 1/10W 10K	1	
R402	ERJ6GEYF472	M.RESISTOR CH 1/10W 4.7K	1	
R403	ERJ6GEYG103	M.RESISTOR CH 1/10W 10K	1	
R404	ERJ6GEYG101	M.RESISTOR CH 1/10W 100	1	
R405	ERJ6GEYG272	M.RESISTOR CH 1/10W 2.7K	1	
R406	ERJ6GEYG183	M.RESISTOR CH 1/10W 18K	1	
R407	ERJ6GEYF473	M.RESISTOR CH 1/10W 47K	1	
R408	ERJ6GEYF123	M.RESISTOR CH 1/10W 12K	1	
R409	ERJ6GEYG103	M.RESISTOR CH 1/10W 10K	1	

Ref.No.	Part No.	Part Name & Description	Pcs	Remarks
R410-12	ERJ6GEYG101	M.RESISTOR CH 1/10W 100	3	
R413	ERJ6GEYF333	M.RESISTOR CH 1/10W 33K	1	
R414	ERJ6GEYF472	M.RESISTOR CH 1/10W 4.7K	1	
R415	ERJ6GEYG332	M.RESISTOR CH 1/10W 3.3K	1	
R416	ERJ6GEYJ274	M.RESISTOR CH 1/10W 270K	1	
R417	ERJ6GEYF472	M.RESISTOR CH 1/10W 4.7K	1	
R418	ERJ6GEYG183	M.RESISTOR CH 1/10W 18K	1	
R419	ERJ6GEYG394	M.RESISTOR CH 1/10W 390K	1	
R420,21	ERJ6GEYG103	M.RESISTOR CH 1/10W 10K	2	
R422	ERJ6GEYF472	M.RESISTOR CH 1/10W 4.7K	1	
R423,24	ERJ6GEYG103	M.RESISTOR CH 1/10W 10K	2	
R426,27	ERJ6GEYG103	M.RESISTOR CH 1/10W 10K	2	
R428	ERJ6GEYG152	M.RESISTOR CH 1/10W 1.5K	1	
R429	ERJ6GEYG563	M.RESISTOR CH 1/10W 56K	1	
R430	ERJ6GEYF561	M.RESISTOR CH 1/10W 560	1	
R431	ERJ6GEYJ471	M.RESISTOR CH 1/10W 470	1	
R432	ERJ6GEYG102	M.RESISTOR CH 1/10W 1K	1	
R433,34	ERJ6GEYG103	M.RESISTOR CH 1/10W 10K	2	
R435,36	ERJ6GEY0R00	M.RESISTOR CH 1/10W 0	2	
R441,42	ERJ6GEYG222	M.RESISTOR CH 1/10W 2.2K	2	
R451	ERJ6GEYG102	M.RESISTOR CH 1/10W 1K	1	
R452	ERJ6GEYF472	M.RESISTOR CH 1/10W 4.7K	1	
R453	ERJ6GEYG223	M.RESISTOR CH 1/10W 22K	1	
R454	ERJ6GEYG821	M.RESISTOR CH 1/10W 820	1	
R455	ERJ6GEYG391	M.RESISTOR CH 1/10W 390	1	
R456	ERJ6GEYF561	M.RESISTOR CH 1/10W 560	1	
R457	ERJ6GEYF472	M.RESISTOR CH 1/10W 4.7K	1	
R458,59	ERJ6GEYG101	M.RESISTOR CH 1/10W 100	2	
R460,61	ERJ6GEYG102	M.RESISTOR CH 1/10W 1K	2	
R462	ERJ6GEYG103	M.RESISTOR CH 1/10W 10K	1	
R463	ERJ6GEYG101	M.RESISTOR CH 1/10W 100	1	
R464,65	ERJ6GEYG102	M.RESISTOR CH 1/10W 1K	2	
R466	ERJ6GEYF561	M.RESISTOR CH 1/10W 560	1	
R467	ERJ6GEYG821	M.RESISTOR CH 1/10W 820	1	
R468,69	ERJ6GEYF822	M.RESISTOR CH 1/10W 8.2K	2	
R470	ERJ6GEYG102	M.RESISTOR CH 1/10W 1K	1	
R471-74	ERJ6GEYG121	M.RESISTOR CH 1/10W 120	4	
R475-78	ERJ6GEYG332	M.RESISTOR CH 1/10W 3.3K	4	
R479	ERJ6GEYG153	M.RESISTOR CH 1/10W 15K	1	
R480,81	ERJ6GEYG101	M.RESISTOR CH 1/10W 100	2	
R482,83	ERJ6GEYG222	M.RESISTOR CH 1/10W 2.2K	2	
R484,85	ERJ6GEYG102	M.RESISTOR CH 1/10W 1K	2	
R486,87	ERJ6GEYG103	M.RESISTOR CH 1/10W 10K	2	
R488-91	ERJ6GEYG470	M.RESISTOR CH 1/10W 47	4	
R492-99	ERJ6GEYG152	M.RESISTOR CH 1/10W 1.5K	8	
R500-03	ERJ6GEY0R00	M.RESISTOR CH 1/10W 0	4	
R504-07	ERJ6GEYG470	M.RESISTOR CH 1/10W 47	4	
R508-11	ERJ6GEYG332	M.RESISTOR CH 1/10W 3.3K	4	
R512-15	ERJ6GEYG102	M.RESISTOR CH 1/10W 1K	4	
R516-19	ERJ6GEYF472	M.RESISTOR CH 1/10W 4.7K	4	
R520-23	ERJ6GEYG101	M.RESISTOR CH 1/10W 100	4	
R526	ERJ6GEYG103	M.RESISTOR CH 1/10W 10K	1	
R527	ERJ6GEYG222	M.RESISTOR CH 1/10W 2.2K	1	
R528	ERJ6GEYG103	M.RESISTOR CH 1/10W 10K	1	
R530	ERJ6GEYG102	M.RESISTOR CH 1/10W 1K	1	
R531	ERJ6GEYG222	M.RESISTOR CH 1/10W 2.2K	1	
R534	ERJ6GEYJ224	M.RESISTOR CH 1/10W 220K	1	
R535	ERJ6GEYJ684	M.RESISTOR CH 1/10W 680K	1	
R536-38	ERJ6GEYG103	M.RESISTOR CH 1/10W 10K	3	
R539	ERJ6GEYF473	M.RESISTOR CH 1/10W 47K	1	
R541	ERJ6GEYG103	M.RESISTOR CH 1/10W 10K	1	
R542	ERJ6GEYG392	M.RESISTOR CH 1/10W 3.9K	1	
R546	ERJ6GEYG102	M.RESISTOR CH 1/10W 1K	1	
R547	ERJ6GEYF472	M.RESISTOR CH 1/10W 4.7K	1	
R548	ERJ6GEY0R00	M.RESISTOR CH 1/10W 0	1	
R551	ERJ6GEYG103	M.RESISTOR CH 1/10W 10K	1	
R552	ERJ6GEYG223	M.RESISTOR CH 1/10W 22K	1	
R553	ERJ6GEYG222	M.RESISTOR CH 1/10W 2.2K	1	
R554	ERJ6GEYG682	M.REISITOR CH 1/10W 6.8K	1	
R555	ERJ6GEYF472	M.RESISTOR CH 1/10W 4.7K	1	
R556	ERJ6GEYG102	M.RESISTOR CH 1/10W 1K	1	
R557,58	ERJ6GEYF472	M.RESISTOR CH 1/10W 4.7K	2	
R559,60	ERJ6GEYG222	M.RESISTOR CH 1/10W 2.2K	2	
R561	ERJ6GEYG332	M.RESISTOR CH 1/10W 3.3K	1	
R562,63	ERJ6GEYG153	M.RESISTOR CH 1/10W 15K	2	

Ref.No.	Part No.	Part Name & Description	Pcs	Remarks
R564	ERJ6GEYG683	M.RESISTOR CH 1/10W 68K	1	
R565	ERJ6GEYG562	M.RESISTOR CH 1/10W 5.6K	1	
R566	ERJ6GEYG681	M.RESISTOR CH 1/10W 680	1	
R567	ERJ6GEY0R00	M.RESISTOR CH 1/10W 0	1	
R571	ERJ6GEYG332	M.RESISTOR CH 1/10W 3.3K	1	
R572	ERJ6GEYG682	M.REISITOR CH 1/10W 6.8K	1	
R573,74	ERJ6GEYG152	M.RESISTOR CH 1/10W 1.5K	2	
R575	ERJ6GEYG682	M.REISITOR CH 1/10W 6.8K	1	
R576	ERJ6GEYG103	M.RESISTOR CH 1/10W 10K	1	
R577	ERJ6GEYG101	M.RESISTOR CH 1/10W 100	1	
R578	ERJ6GEYG104	M.RESISTOR CH 1/10W 100K	1	
R579	ERJ6GEYG223	M.RESISTOR CH 1/10W 22K	1	
R581	ERJ6GEYG152	M.RESISTOR CH 1/10W 1.5K	1	
R582	ERJ6GEYG682	M.REISITOR CH 1/10W 6.8K	1	
R583	ERJ6GEY0R00	M.RESISTOR CH 1/10W 0	1	
R586	ERJ6GEY0R00	M.RESISTOR CH 1/10W 0	1	
R601-03	ERJ6GEYG102	M.RESISTOR CH 1/10W 1K	3	
R604-06	ERJ6GEYG152	M.RESISTOR CH 1/10W 1.5K	3	
R607	ERJ6GEYG101	M.RESISTOR CH 1/10W 100	1	
R609,10	ERJ6GEYG101	M.RESISTOR CH 1/10W 100	2	
R616-18	ERJ6GEYG152	M.RESISTOR CH 1/10W 1.5K	3	
R651	ERJ6GEYG101	M.RESISTOR CH 1/10W 100	1	
R652	ERJ6GEYG103	M.RESISTOR CH 1/10W 10K	1	
R653	ERJ6GEYG102	M.RESISTOR CH 1/10W 1K	1	
R654	ERJ6GEYG221	M.RESISTOR CH 1/10W 220	1	
R655	ERJ6GEYG331	M.RESISTOR CH 1/10W 330	1	
R656	ERJ6GEYG102	M.RESISTOR CH 1/10W 1K	1	
R657	ERJ6GEYG331	M.RESISTOR CH 1/10W 330	1	
R658	ERJ6GEYG152	M.RESISTOR CH 1/10W 1.5K	1	
R659	ERJ6GEYG394	M.RESISTOR CH 1/10W 390K	1	
R660	ERJ6GEYG154	M.RESISTOR CH 1/10W 150K	1	
R661	ERJ6GEYG181	M.RESISTOR CH 1/10W 180	1	
R662	ERJ6GEYG102	M.RESISTOR CH 1/10W 1K	1	
R664,65	ERJ6GEYG122	M.RESISTOR CH 1/10W 1.2K	2	
R666	ERJ6GEYG101	M.RESISTOR CH 1/10W 100	1	
R667	ERJ6GEYG102	M.RESISTOR CH 1/10W 1K	1	
R668,69	ERJ6GEYG101	M.RESISTOR CH 1/10W 100	2	
R670	ERJ6GEYG105	M.RESISTOR CH 1/10W 1M	1	
R671	ERJ6GEYG101	M.RESISTOR CH 1/10W 100	1	
R672	ERJ6GEYG103	M.RESISTOR CH 1/10W 10K	1	
R673	ERJ6GEYG105	M.RESISTOR CH 1/10W 1M	1	
R674	ERJ6GEYF333	M.RESISTOR CH 1/10W 33K	1	
R675	ERJ6GEY0R00	M.RESISTOR CH 1/10W 0	1	
R676	ERJ6GEYG222	M.RESISTOR CH 1/10W 2.2K	1	
R680	ERJ6GEYG102	M.RESISTOR CH 1/10W 1K	1	
R681	ERJ6GEYG681	M.RESISTOR CH 1/10W 680	1	
R682	ERJ6GEYG101	M.RESISTOR CH 1/10W 100	1	
R683	ERJ6GEYG102	M.RESISTOR CH 1/10W 1K	1	
R684	ERJ6GEYG101	M.RESISTOR CH 1/10W 100	1	
R701	ERJ6GEYG103	M.RESISTOR CH 1/10W 10K	1	
R702	ERJ6GEYG682	M.REISITOR CH 1/10W 6.8K	1	
R703	ERJ6GEYG273	M.RESISTOR CH 1/10W 27K	1	
R704	ERJ6GEYG152	M.RESISTOR CH 1/10W 1.5K	1	
R705,06	ERJ6GEYJ471	M.RESISTOR CH 1/10W 470	2	
R707,08	ERJ6GEYG152	M.RESISTOR CH 1/10W 1.5K	2	
R709	ERJ6GEYF561	M.RESISTOR CH 1/10W 560	1	
R710	ERJ6GEYG152	M.RESISTOR CH 1/10W 1.5K	1	
R711	ERJ6GEYF561	M.RESISTOR CH 1/10W 560	1	
R712	ERJ6GEYG394	M.RESISTOR CH 1/10W 390K	1	
R713	ERJ6GEYJ274	M.RESISTOR CH 1/10W 270K	1	
R714	ERJ6GEYG391	M.RESISTOR CH 1/10W 390	1	
R715	ERJ6GEYG102	M.RESISTOR CH 1/10W 1K	1	
R717	ERJ6GEYG272	M.RESISTOR CH 1/10W 2.7K	1	
R718	ERJ6GEYG122	M.RESISTOR CH 1/10W 1.2K	1	
R719	ERJ6GEYG101	M.RESISTOR CH 1/10W 100	1	
R720	ERJ6GEYG102	M.RESISTOR CH 1/10W 1K	1	
R721,22	ERJ6GEYG101	M.RESISTOR CH 1/10W 100	2	
R723	ERJ6GEYG105	M.RESISTOR CH 1/10W 1M	1	
R724	ERJ6GEYG101	M.RESISTOR CH 1/10W 100	1	
R725	ERJ6GEYG103	M.RESISTOR CH 1/10W 10K	1	
R726	ERJ6GEYG105	M.RESISTOR CH 1/10W 1M	1	
R727,28	ERJ6GEYF123	M.RESISTOR CH 1/10W 12K	2	
R729	ERJ6GEYG222	M.RESISTOR CH 1/10W 2.2K	1	
R731-38	ERJ6GEYG102	M.RESISTOR CH 1/10W 1K	8	
R751	ERJ6GEYG103	M.RESISTOR CH 1/10W 10K	1	

Ref.No.	Part No.	Part Name & Description	Pcs	Remarks
R752	ERJ6GEYG682	M.REISITOR CH 1/10W 6.8K	1	
R753	ERJ6GEYG273	M.RESISTOR CH 1/10W 27K	1	
R754	ERJ6GEYG152	M.RESISTOR CH 1/10W 1.5K	1	
R755,56	ERJ6GEYJ471	M.RESISTOR CH 1/10W 470	2	
R757,58	ERJ6GEYG152	M.RESISTOR CH 1/10W 1.5K	2	
R759	ERJ6GEYF561	M.RESISTOR CH 1/10W 560	1	
R760	ERJ6GEYG152	M.RESISTOR CH 1/10W 1.5K	1	
R761	ERJ6GEYF561	M.RESISTOR CH 1/10W 560	1	
R762	ERJ6GEYG394	M.RESISTOR CH 1/10W 390K	1	
R763	ERJ6GEYJ274	M.RESISTOR CH 1/10W 270K	1	
R764	ERJ6GEYG391	M.RESISTOR CH 1/10W 390	1	
R765	ERJ6GEYG102	M.RESISTOR CH 1/10W 1K	1	
R767	ERJ6GEYG272	M.RESISTOR CH 1/10W 2.7K	1	
R768	ERJ6GEYG122	M.RESISTOR CH 1/10W 1.2K	1	
R769	ERJ6GEYG101	M.RESISTOR CH 1/10W 100	1	
R770	ERJ6GEYG102	M.RESISTOR CH 1/10W 1K	1	
R771,72	ERJ6GEYG101	M.RESISTOR CH 1/10W 100	2	
R773	ERJ6GEYG105	M.RESISTOR CH 1/10W 1M	1	
R774	ERJ6GEYG101	M.RESISTOR CH 1/10W 100	1	
R775	ERJ6GEYG103	M.RESISTOR CH 1/10W 10K	1	
R776	ERJ6GEYG105	M.RESISTOR CH 1/10W 1M	1	
R777,78	ERJ6GEYF123	M.RESISTOR CH 1/10W 12K	2	
R779	ERJ6GEYG222	M.RESISTOR CH 1/10W 2.2K	1	
R781-88	ERJ6GEYG102	M.RESISTOR CH 1/10W 1K	8	
R801	ERJ6GEYG103	M.RESISTOR CH 1/10W 10K	1	
R803	ERJ6GEY0R00	M.RESISTOR CH 1/10W 0	1	
R806	ERJ6GEY0R00	M.RESISTOR CH 1/10W 0	1	
R808-10	ERJ6GEYG391	M.RESISTOR CH 1/10W 390	3	
R811	ERJ6GEYG332	M.RESISTOR CH 1/10W 3.3K	1	
R812-22	ERJ6GEYG391	M.RESISTOR CH 1/10W 390	11	
R823	ERJ6GEYG332	M.RESISTOR CH 1/10W 3.3K	1	
R851	ERJ6GEYG101	M.RESISTOR CH 1/10W 100	1	
R852	ERJ6GEYG271	M.RESISTOR CH 1/10W 270	1	
R853	ERJ6GEYG101	M.RESISTOR CH 1/10W 100	1	
R872,73	ERJ6GEYG101	M.RESISTOR CH 1/10W 100	2	
R901	ERJ6GEYG102	M.RESISTOR CH 1/10W 1K	1	
R903	ERJ6GEYG101	M.RESISTOR CH 1/10W 100	1	
R904,05	ERJ6GEYG470	M.RESISTOR CH 1/10W 47	2	
R906	ERJ6GEYG102	M.RESISTOR CH 1/10W 1K	1	
R961	ERJ6GEYG470	M.RESISTOR CH 1/10W 47	1	
R962	ERJ6GEYG222	M.RESISTOR CH 1/10W 2.2K	1	
R963	ERJ6GEYG102	M.RESISTOR CH 1/10W 1K	1	
R964	ERJ6GEY0R00	M.RESISTOR CH 1/10W 0	1	
R965	ERJ6GEYG122	M.RESISTOR CH 1/10W 1.2K	1	
R966	ERJ6GEYG102	M.RESISTOR CH 1/10W 1K	1	
R967	ERJ6GEYG101	M.RESISTOR CH 1/10W 100	1	
R968	ERJ6GEYG222	M.RESISTOR CH 1/10W 2.2K	1	
R969,70	ERJ6GEYG102	M.RESISTOR CH 1/10W 1K	2	
R971	ERJ6GEYG222	M.RESISTOR CH 1/10W 2.2K	1	
R972	ERJ6GEYG103	M.RESISTOR CH 1/10W 10K	1	
R973	ERJ6GEYG221	M.RESISTOR CH 1/10W 220	1	
R974	ERJ6GEYG681	M.RESISTOR CH 1/10W 680	1	
R985	ERJ6GEYG103	M.RESISTOR CH 1/10W 10K	1	
TG1-G6	VJR0646	TEST POINT	6	
TP301	VJR0646	TEST POINT	1	
TP401	VJR0646	TEST POINT	1	
TP402	EYF6CU	TEST POINT	1	
TP403	VJR0646	TEST POINT	1	
TP405	VJR0646	TEST POINT	1	
TP451	VJR0646	TEST POINT	1	
TP551-53	VJR0646	TEST POINT	3	
TP651	VJR0646	TEST POINT	1	
TP701	VJR0646	TEST POINT	1	
TP751	VJR0646	TEST POINT	1	
TP951	EYF6CU	TEST POINT	1	
TP952	VJR0646	TEST POINT	1	
VL551	VLQ0415	COIL	1	
VR251	EVMEGSA00B53	V.RESISTOR 5K	1	
VR301	EVMEGSA00B53	V.RESISTOR 5K	1	
VR351	EVMEGSA00B12	V.RESISTOR 100	1	
VR352	VRV0112B201	V.RESISTOR 200	1	

Ref.No.	Part No.	Part Name & Description	Pcs	Remarks
VR353,54	EVMEGSA00B52	V.RESISTOR 500	2	
VR406,07	EVMEGSA00B13	V.RESISTOR 1K	2	
VR408-10	EVMEGSA00B53	V.RESISTOR 5K	3	
VR459-66	EVMEGSA00B13	V.RESISTOR 1K	8	
VR551	EVMEGSA00B23	V.RESISTOR 2K	1	
VR552	EVMEGSA00B53	V.RESISTOR 5K	1	
VR651	EVMEGSA00B13	V.RESISTOR 1K	1	
VR652	EVMEGSA00B53	V.RESISTOR 5K	1	
VR701,02	EVMEGSA00B13	V.RESISTOR 1K	2	
VR703	EVMEGSA00B53	V.RESISTOR 5K	1	
VR751,52	EVMEGSA00B13	V.RESISTOR 1K	2	
VR753	EVMEGSA00B53	V.RESISTOR 5K	1	
VR952	EVMEGSA00B52	V.RESISTOR 500	1	
X401	VSX0270	CRYSTAL OSCILLATOR	1	
X901	VSX0949	CRYSTAL OSCILLATOR	1	
		MISCELLANEOUS		
	VML2143	CARD PULLER	1	
	VML2144	CARD PULLER	1	

Ref.No.	Part No.	Part Name & Description	Pcs	Remarks
■E7	VEP84326A	F7 A PROCESS P.C.BOARD	1	(RTL)
C1	ECEV1CV470Q	E.CAPACITOR CH 16V 47U	1	
C2	ECUM1H103KBN	C.CAPACITOR CH 50V 0.01U	1	
C3,C4	ECEV1CV470Q	E.CAPACITOR CH 16V 47U	2	
C5	ECUM1H103KBN	C.CAPACITOR CH 50V 0.01U	1	
C6,C7	ECEV1CV470Q	E.CAPACITOR CH 16V 47U	2	
C8	ECUM1H103KBN	C.CAPACITOR CH 50V 0.01U	1	
C9	ECEV1CV470Q	E.CAPACITOR CH 16V 47U	1	
C10	ECUM1H103KBN	C.CAPACITOR CH 50V 0.01U	1	
C15,16	ECUM1H102KBN	C.CAPACITOR CH 50V 1000P	2	
C20-31	ECUM1H103KBN	C.CAPACITOR CH 50V 0.01U	12	
C32	ECUX1E104KBN	C.CAPACITOR CH 25V 0.1U	1	
C33-35	ECUM1H103KBN	C.CAPACITOR CH 50V 0.01U	3	
C110-21	ECUM1H103KBN	C.CAPACITOR CH 50V 0.01U	12	
C122	ECKF1H182KB	C.CAPACITOR 50V 1800P	1	
C190-94	ECUM1H103KBN	C.CAPACITOR CH 50V 0.01U	5	
C220,21	ECUM1H103KBN	C.CAPACITOR CH 50V 0.01U	2	
C222,23	ECEV1CV470Q	E.CAPACITOR CH 16V 47U	2	
C224,25	ECUM1H103KBN	C.CAPACITOR CH 50V 0.01U	2	
C228,29	ECUM1H103KBN	C.CAPACITOR CH 50V 0.01U	2	
C231	ECUM1H103KBN	C.CAPACITOR CH 50V 0.01U	1	
C232-34	ECEV1HV0R1Q	E.CAPACITOR CH 50V 0.1U	3	
C235	ECEV1CV100Q	E.CAPACITOR CH 16V 10U	1	
C236	ECUM1H103KBN	C.CAPACITOR CH 50V 0.01U	1	
C237	ECEV1CV100Q	E.CAPACITOR CH 16V 10U	1	
C238	ECUM1H103KBN	C.CAPACITOR CH 50V 0.01U	1	
C239,40	ECUM1H470JCN	C.CAPACITOR CH 50V 47P	2	
C340-44	ECUM1H103KBN	C.CAPACITOR CH 50V 0.01U	5	
C345-47	ECUX1E104KBN	C.CAPACITOR CH 25V 0.1U	3	
C430	ECEV0JV330Q	E.CAPACITOR CH6.3V 33U	1	
C434	ECUM1H104ZFN	C.CAPACITOR CH 50V 0.1U	1	
C435	ECUX1H122KBN	C.CAPACITOR CH 50V 1200P	1	
C438	ECEV0JV330Q	E.CAPACITOR CH6.3V 33U	1	
C439,40	ECUM1H104ZFN	C.CAPACITOR CH 50V 0.1U	2	
C442-45	ECUM1H104ZFN	C.CAPACITOR CH 50V 0.1U	4	
C447-49	ECUM1H104ZFN	C.CAPACITOR CH 50V 0.1U	3	
C530	ECUM1H103KBN	C.CAPACITOR CH 50V 0.01U	1	
C531	ECUM1H180JCN	C.CAPACITOR CH 50V 18P	1	
C532,33	ECUM1H103KBN	C.CAPACITOR CH 50V 0.01U	2	
C534	ECUM1H180JCN	C.CAPACITOR CH 50V 18P	1	
C535-41	ECUM1H103KBN	C.CAPACITOR CH 50V 0.01U	7	
C651-56	ECUM1H103KBN	C.CAPACITOR CH 50V 0.01U	6	
C657	ECEV1CV470Q	E.CAPACITOR CH 16V 47U	1	
C658	ECUM1H103KBN	C.CAPACITOR CH 50V 0.01U	1	
C659	ECUX1E104KBN	C.CAPACITOR CH 25V 0.1U	1	
C750-52	ECUM1H103KBN	C.CAPACITOR CH 50V 0.01U	3	
C800	ECUM1H103KBN	C.CAPACITOR CH 50V 0.01U	1	
C820	ECUM1H103KBN	C.CAPACITOR CH 50V 0.01U	1	
C821	ECUX1E104KBN	C.CAPACITOR CH 25V 0.1U	1	
C822	ECUM1H103KBN	C.CAPACITOR CH 50V 0.01U	1	
C823	ECEV1CV470Q	E.CAPACITOR CH 16V 47U	1	
C824,25	ECUX1E104KBN	C.CAPACITOR CH 25V 0.1U	2	
C826	ECUM1H103KBN	C.CAPACITOR CH 50V 0.01U	1	
C827	ECUM1H121JCN	C.CAPACITOR CH 50V 120P	1	
C829	ECEV1CV100Q	E.CAPACITOR CH 16V 10U	1	
C832,33	ECUM1H103KBN	C.CAPACITOR CH 50V 0.01U	2	
C834	ECUM1H101JCN	C.CAPACITOR CH 50V 100P	1	
C835,36	ECUM1H103KBN	C.CAPACITOR CH 50V 0.01U	2	
C837	ECEV1HN4R7Q	E.CAPACITOR CH 50V 4.7U	1	
C838	ECUM1H103KBN	C.CAPACITOR CH 50V 0.01U	1	
C839	ECUX1E104KBN	C.CAPACITOR CH 25V 0.1U	1	
C840-42	ECUM1H103KBN	C.CAPACITOR CH 50V 0.01U	3	
C843	ECEV1HN4R7Q	E.CAPACITOR CH 50V 4.7U	1	
C920-27	ECUM1H103KBN	C.CAPACITOR CH 50V 0.01U	8	
C930	ECUM1H103KBN	C.CAPACITOR CH 50V 0.01U	1	
C970	ECUM1H104ZFN	C.CAPACITOR CH 50V 0.1U	1	
C971	ECEV0JV470Q	E.CAPACITOR CH6.3V 47U	1	
C972	ECUM1H103KBN	C.CAPACITOR CH 50V 0.01U	1	
C973,74	ECUX1H221KBN	C.CAPACITOR CH 50V 220P	2	
D820,21	MA152A	DIODE	2	
D822,23	MA157	DIODE	2	

Ref.No.	Part No.	Part Name & Description	Pcs	Remarks
FL1	VLF0576	FILTER	1	
FL431	VLF0941C223	FILTER	1	
IC15	MC10H125M	IC	1	
IC16	MC74HC541AF	IC	1	
IC17	MC74HC574AF	IC	1	
IC18	MC74HC541AF	IC	1	
IC19	MC74HC153F	IC	1	
IC20	T74HCT541AF	IC	1	
IC21	MC74HC08AF	IC	1	
IC22	TVHT244F	IC	1	
IC23	MC74HC74AF	IC	1	
IC24-26	MC74HC541AF	IC	3	
IC27	MC10H124M	IC	1	
IC110,11	SN74S1051NS	IC	2	
IC112	74F541SJ	IC	1	
IC113	74F245SJ	IC	1	
IC114,15	74F541SJ	IC	2	
IC116,17	74AC138SJ	IC	2	
IC118,19	UPD71055GB	IC	2	
IC120	74F32SJ	IC	1	
IC121	74AC04SJ	IC	1	
IC190	MC74HC540AF	IC	1	
IC191-93	MC74HC541AF	IC	3	
IC194	MC74HC04AF	IC	1	
IC220	74AC04SJ	IC	1	
IC221	MC74HC74AF	IC	1	
IC224,25	NJM78L05UA	IC	2	
IC226,27	MC4044M	IC	2	
IC229	NJM319M	IC	1	
IC340	EPF10K20TC-4	IC	1	
IC341	S80726ANDP	IC	1	
IC342	VSI2997B	IC	1	
IC343,44	UPD42280G3	IC	2	
IC430	XC62FP3302P	IC	1	
IC434	M5256DVP10VL	IC	1	
IC435	UPD65845G068	IC	1	
IC436	M5256DVP10VL	IC	1	
IC530	MC74HC157AF	IC	1	
IC531	AD1893JST	IC	1	
IC532	K6256DLG7L	IC	1	
IC533	T16GH7AF1216	IC	1	
IC534	K6256DLG7L	IC	1	
IC535	MC74HC74AF	IC	1	
IC536	MC74HC157AF	IC	1	
IC651	EPF10K20TC-4	IC	1	
IC652	M5M417800DJ6	IC	1	
IC653	VSI2999A	IC	1	
IC654	S80726ANDP	IC	1	
IC750	MB621926	IC	1	
IC751	MB814400C70L	IC	1	
IC800	MC74HC157AF	IC	1	
IC820	74AC04SJ	IC	1	
IC821	MC74HC08AF	IC	1	
IC822	MC74HC74AF	IC	1	
IC823	DS9637ACN	IC	1	
IC825	NJM78L05UA	IC	1	
IC826	SN75158P	IC	1	
IC920	MC74HC08AF	IC	1	
IC921	MB87D136APFV	IC	1	
IC924	MC74HC74AF	IC	1	
IC970	TL7705CPSB	IC	1	
IS342	VJS3096308	CONNECTOR (FEMALE)	1	
IS653	VJS3096308	CONNECTOR (FEMALE)	1	
L1,L2	VLP0133	COIL	2	
P1,P2	VJP3454B096	CONNECTOR (MALE)	2	
Q820	2SJ163-Q	TRANSISTOR	1	
Q821-23	2SC2480	TRANSISTOR	3	
R15,16	ERJ6GEY0R00	M.RESISTOR CH 1/10W 0	2	

Ref.No.	Part No.	Part Name & Description	Pcs	Remarks
R17,18	ERJ6GEYG101	M.RESISTOR CH 1/10W 100	2	
R20	ERJ6GEYG103	M.RESISTOR CH 1/10W 10K	1	
R21	ERJ6GEYG331	M.RESISTOR CH 1/10W 330	1	
R22	ERJ6GEYG103	M.RESISTOR CH 1/10W 10K	1	
R23-32	ERJ6GEY0R00	M.RESISTOR CH 1/10W 0	10	
R34-36	ERJ6GEY0R00	M.RESISTOR CH 1/10W 0	3	
R37-39	ERJ6GEYG331	M.RESISTOR CH 1/10W 330	3	
R41,42	ERJ6GEY0R00	M.RESISTOR CH 1/10W 0	2	
R44-50	ERJ6GEY0R00	M.RESISTOR CH 1/10W 0	7	
R51	ERJ6GEYG331	M.RESISTOR CH 1/10W 330	1	
R55	ERJ6GEYG103	M.RESISTOR CH 1/10W 10K	1	
R56	ERJ6GEYG102	M.RESISTOR CH 1/10W 1K	1	
R57	ERJ6GEYF472	M.RESISTOR CH 1/10W 4.7K	1	
R60,61	ERJ6GEYG103	M.RESISTOR CH 1/10W 10K	2	
R62-64	ERJ6GEYG331	M.RESISTOR CH 1/10W 330	3	
R65	ERJ6GEYG471	M.RESISTOR CH 1/10W 470	1	
R66-73	ERJ6GEYG470	M.RESISTOR CH 1/10W 47	8	
R74	ERJ6GEYG471	M.RESISTOR CH 1/10W 470	1	
R75-83	ERJ6GEYG470	M.RESISTOR CH 1/10W 47	9	
R84,85	ERJ6GEYG471	M.RESISTOR CH 1/10W 470	2	
R86	ERJ6GEYG470	M.RESISTOR CH 1/10W 47	1	
R92-94	ERJ6GEY0R00	M.RESISTOR CH 1/10W 0	3	
R96	ERJ6GEY0R00	M.RESISTOR CH 1/10W 0	1	
R103	ERJ6GEY0R00	M.RESISTOR CH 1/10W 0	1	
R104-06	ERJ6GEYG103	M.RESISTOR CH 1/10W 10K	3	
R107-09	ERJ6GEY0R00	M.RESISTOR CH 1/10W 0	3	
R110-32	ERJ6GEYG470	M.RESISTOR CH 1/10W 47	23	
R133-36	ERJ6GEYG331	M.RESISTOR CH 1/10W 330	4	
R137-40	ERJ6GEYG332	M.RESISTOR CH 1/10W 3.3K	4	
R141-46	ERJ6GEYG152	M.RESISTOR CH 1/10W 1.5K	6	
R147-50	ERJ6GEYG332	M.RESISTOR CH 1/10W 3.3K	4	
R151-55	ERJ6GEYG152	M.RESISTOR CH 1/10W 1.5K	5	
R156	ERJ6GEYG470	M.RESISTOR CH 1/10W 47	1	
R157	ERJ6GEYG103	M.RESISTOR CH 1/10W 10K	1	
R158	ERJ6GEYG470	M.RESISTOR CH 1/10W 47	1	
R159	ERJ6GEYG103	M.RESISTOR CH 1/10W 10K	1	
R161-64	ERJ6GEYG103	M.RESISTOR CH 1/10W 10K	4	
R165	ERJ6GEY0R00	M.RESISTOR CH 1/10W 0	1	
R167,68	ERJ6GEYG103	M.RESISTOR CH 1/10W 10K	2	
R190	ERJ6GEY0R00	M.RESISTOR CH 1/10W 0	1	
R193-96	ERJ6GEYG331	M.RESISTOR CH 1/10W 330	4	
R199	ERJ6GEY0R00	M.RESISTOR CH 1/10W 0	1	
R220,21	ERJ6GEYG152	M.RESISTOR CH 1/10W 1.5K	2	
R222	ERJ6GEYG562	M.RESISTOR CH 1/10W 5.6K	1	
R223	ERJ6GEYG392	M.RESISTOR CH 1/10W 3.9K	1	
R224,25	ERJ6GEYG102	M.RESISTOR CH 1/10W 1K	2	
R226,27	ERJ6GEYG101	M.RESISTOR CH 1/10W 100	2	
R228,29	ERJ6GEYG103	M.RESISTOR CH 1/10W 10K	2	
R232,33	ERJ6GEYG103	M.RESISTOR CH 1/10W 10K	2	
R236	ERJ6GEY0R00	M.RESISTOR CH 1/10W 0	1	
R237	ERJ6GEYG332	M.RESISTOR CH 1/10W 3.3K	1	
R239	ERJ6GEYG332	M.RESISTOR CH 1/10W 3.3K	1	
R240	ERJ6GEYG331	M.RESISTOR CH 1/10W 330	1	
R241	ERJ6GEYF123	M.RESISTOR CH 1/10W 12K	1	
R242	ERJ6GEYG332	M.RESISTOR CH 1/10W 3.3K	1	
R243	ERJ6GEYG682	M.REISITOR CH 1/10W 6.8K	1	
R244	ERJ6GEYG331	M.RESISTOR CH 1/10W 330	1	
R245	ERJ6GEYG332	M.RESISTOR CH 1/10W 3.3K	1	
R246	ERJ6GEYF123	M.RESISTOR CH 1/10W 12K	1	
R320,21	ERJ6GEY0R00	M.RESISTOR CH 1/10W 0	2	
R340,41	ERJ6GEYG102	M.RESISTOR CH 1/10W 1K	2	
R342-45	ERJ6GEY0R00	M.RESISTOR CH 1/10W 0	4	
R348-50	ERJ6GEY0R00	M.RESISTOR CH 1/10W 0	3	
R351-56	ERJ6GEYG102	M.RESISTOR CH 1/10W 1K	6	
R357	ERJ6GEY0R00	M.RESISTOR CH 1/10W 0	1	
R359-61	ERJ6GEY0R00	M.RESISTOR CH 1/10W 0	3	
R395	ERJ6GEY0R00	M.RESISTOR CH 1/10W 0	1	
R397	ERJ6GEY0R00	M.RESISTOR CH 1/10W 0	1	
R399	ERJ6GEY0R00	M.RESISTOR CH 1/10W 0	1	
R401	ERJ6GEY0R00	M.RESISTOR CH 1/10W 0	1	
R431	ERJ6GEYF123	M.RESISTOR CH 1/10W 12K	1	
R434	ERJ6GEY0R00	M.RESISTOR CH 1/10W 0	1	
R437-39	ERJ6GEY0R00	M.RESISTOR CH 1/10W 0	3	
R446	ERJ6GEY0R00	M.RESISTOR CH 1/10W 0	1	
R450	ERJ6GEYG102	M.RESISTOR CH 1/10W 1K	1	

Ref.No.	Part No.	Part Name & Description	Pcs	Remarks
R452	ERJ6GEYG102	M.RESISTOR CH 1/10W 1K	1	
R453-56	ERJ6GEY0R00	M.RESISTOR CH 1/10W 0	4	
R458	ERJ6GEYG102	M.RESISTOR CH 1/10W 1K	1	
R459,60	ERJ6GEY0R00	M.RESISTOR CH 1/10W 0	2	
R462	ERJ6GEYG102	M.RESISTOR CH 1/10W 1K	1	
R531	ERJ6GEYG103	M.RESISTOR CH 1/10W 10K	1	
R532	ERJ6GEY0R00	M.RESISTOR CH 1/10W 0	1	
R533	ERJ6GEYG103	M.RESISTOR CH 1/10W 10K	1	
R534	ERJ6GEYG331	M.RESISTOR CH 1/10W 330	1	
R536	ERJ6GEY0R00	M.RESISTOR CH 1/10W 0	1	
R537	ERJ6GEYG331	M.RESISTOR CH 1/10W 330	1	
R538,39	ERJ6GEY0R00	M.RESISTOR CH 1/10W 0	2	
R540-43	ERJ6GEYG102	M.RESISTOR CH 1/10W 1K	4	
R544	ERJ6GEYG331	M.RESISTOR CH 1/10W 330	1	
R546	ERJ6GEY0R00	M.RESISTOR CH 1/10W 0	1	
R548	ERJ6GEY0R00	M.RESISTOR CH 1/10W 0	1	
R549	ERJ6GEYG331	M.RESISTOR CH 1/10W 330	1	
R550	ERJ6GEY0R00	M.RESISTOR CH 1/10W 0	1	
R554	ERJ6GEYG331	M.RESISTOR CH 1/10W 330	1	
R555,56	ERJ6GEY0R00	M.RESISTOR CH 1/10W 0	2	
R557	ERJ6GEYG331	M.RESISTOR CH 1/10W 330	1	
R558	ERJ6GEY0R00	M.RESISTOR CH 1/10W 0	1	
R560	ERJ6GEY0R00	M.RESISTOR CH 1/10W 0	1	
R561	ERJ6GEYG331	M.RESISTOR CH 1/10W 330	1	
R564	ERJ6GEY0R00	M.RESISTOR CH 1/10W 0	1	
R577-80	ERJ6GEY0R00	M.RESISTOR CH 1/10W 0	4	
R581-85	ERJ6GEYG103	M.RESISTOR CH 1/10W 10K	5	
R586	ERJ6GEY0R00	M.RESISTOR CH 1/10W 0	1	
R601	ERJ6GEY0R00	M.RESISTOR CH 1/10W 0	1	
R603,04	ERJ6GEYG104	M.RESISTOR CH 1/10W 100K	2	
R605	ERJ6GEY0R00	M.RESISTOR CH 1/10W 0	1	
R608	ERJ6GEY0R00	M.RESISTOR CH 1/10W 0	1	
R609	ERJ6GEYG104	M.RESISTOR CH 1/10W 100K	1	
R610	ERJ6GEYG331	M.RESISTOR CH 1/10W 330	1	
R655	ERJ6GEY0R00	M.RESISTOR CH 1/10W 0	1	
R658	ERJ6GEY0R00	M.RESISTOR CH 1/10W 0	1	
R660	ERJ6GEY0R00	M.RESISTOR CH 1/10W 0	1	
R664	ERJ6GEY0R00	M.RESISTOR CH 1/10W 0	1	
R666,67	ERJ6GEY0R00	M.RESISTOR CH 1/10W 0	2	
R668-71	ERJ6GEYG470	M.RESISTOR CH 1/10W 47	4	
R672-75	ERJ6GEY0R00	M.RESISTOR CH 1/10W 0	4	
R676-83	ERJ6GEYG470	M.RESISTOR CH 1/10W 47	8	
R684-87	ERJ6GEY0R00	M.RESISTOR CH 1/10W 0	4	
R690	ERJ6GEY0R00	M.RESISTOR CH 1/10W 0	1	
R691-95	ERJ6GEYG102	M.RESISTOR CH 1/10W 1K	5	
R696-98	ERJ6GEY0R00	M.RESISTOR CH 1/10W 0	3	
R700	ERJ6GEY0R00	M.RESISTOR CH 1/10W 0	1	
R702-04	ERJ6GEYG102	M.RESISTOR CH 1/10W 1K	3	
R721	ERJ6GEY0R00	M.RESISTOR CH 1/10W 0	1	
R723-26	ERJ6GEY0R00	M.RESISTOR CH 1/10W 0	4	
R728	ERJ6GEY0R00	M.RESISTOR CH 1/10W 0	1	
R752	ERJ6GEY0R00	M.RESISTOR CH 1/10W 0	1	
R754	ERJ6GEY0R00	M.RESISTOR CH 1/10W 0	1	
R755,56	ERJ6GEYG331	M.RESISTOR CH 1/10W 330	2	
R758	ERJ6GEYG103	M.RESISTOR CH 1/10W 10K	1	
R760	ERJ6GEYG103	M.RESISTOR CH 1/10W 10K	1	
R762,63	ERJ6GEYG103	M.RESISTOR CH 1/10W 10K	2	
R765	ERJ6GEYG103	M.RESISTOR CH 1/10W 10K	1	
R767	ERJ6GEYG103	M.RESISTOR CH 1/10W 10K	1	
R769	ERJ6GEYG103	M.RESISTOR CH 1/10W 10K	1	
R771	ERJ6GEYG103	M.RESISTOR CH 1/10W 10K	1	
R773	ERJ6GEYG103	M.RESISTOR CH 1/10W 10K	1	
R775	ERJ6GEYG103	M.RESISTOR CH 1/10W 10K	1	
R777	ERJ6GEYG103	M.RESISTOR CH 1/10W 10K	1	
R779	ERJ6GEYG103	M.RESISTOR CH 1/10W 10K	1	
R800	ERJ6GEYG331	M.RESISTOR CH 1/10W 330	1	
R803	ERJ6GEY0R00	M.RESISTOR CH 1/10W 0	1	
R820	ERJ6GEY0R00	M.RESISTOR CH 1/10W 0	1	
R822	ERJ6GEYF561	M.RESISTOR CH 1/10W 560	1	
R823,24	ERJ6GEYG332	M.RESISTOR CH 1/10W 3.3K	2	
R825	ERJ6RBD111	M.RESISTOR CH 1/10W 110	1	
R826	ERJ6GEYG822	M.RESISTOR CH 1/10W 8.2K	1	
R829	ERJ6GEYG103	M.RESISTOR CH 1/10W 10K	1	
R830	ERJ6GEYG102	M.RESISTOR CH 1/10W 1K	1	
R833	ERJ6GEYG101	M.RESISTOR CH 1/10W 100	1	

Ref.No.	Part No.	Part Name & Description	Pcs	Remarks
R838	ERJ6GEYG105	M.RESISTOR CH 1/10W 1M	1	
R840	ERJ6GEY0R00	M.RESISTOR CH 1/10W 0	1	
R842	ERJ6RED560	M.RESISTOR CH 1/10W 56	1	
R843	ERJ6GEY0R00	M.RESISTOR CH 1/10W 0	1	
R847	ERJ6GEYG332	M.RESISTOR CH 1/10W 3.3K	1	
R848	ERJ6RED560	M.RESISTOR CH 1/10W 56	1	
R895,96	ERJ6GEY0R00	M.RESISTOR CH 1/10W 0	2	
R900	ERJ6GEY0R00	M.RESISTOR CH 1/10W 0	1	
R921	ERJ6GEY0R00	M.RESISTOR CH 1/10W 0	1	
R924	ERJ6GEY0R00	M.RESISTOR CH 1/10W 0	1	
R926-28	ERJ6GEY0R00	M.RESISTOR CH 1/10W 0	3	
R930	ERJ6GEY0R00	M.RESISTOR CH 1/10W 0	1	
R932,33	ERJ6GEY0R00	M.RESISTOR CH 1/10W 0	2	
R938	ERJ6GEY0R00	M.RESISTOR CH 1/10W 0	1	
R942	ERJ6GEY0R00	M.RESISTOR CH 1/10W 0	1	
R944	ERJ6GEY0R00	M.RESISTOR CH 1/10W 0	1	
R948	ERJ6GEYG102	M.RESISTOR CH 1/10W 1K	1	
R950	ERJ6GEY0R00	M.RESISTOR CH 1/10W 0	1	
R953	ERJ6GEY0R00	M.RESISTOR CH 1/10W 0	1	
R955	ERJ6GEY0R00	M.RESISTOR CH 1/10W 0	1	
R970	ERJ6GEYG103	M.RESISTOR CH 1/10W 10K	1	
R972	ERJ6GEYG103	M.RESISTOR CH 1/10W 10K	1	
SW751	VSS0367-08B	SWITCH	1	
T820,21	VLT0890	TRANSFORMER	2	
TG1-G6	VJR0646	TEST POINT	6	
TG260	VJR0646	TEST POINT	1	
TP15,16	EYF6CU	TEST POINT	2	
TP190,91	VJR0646	TEST POINT	2	
TP193,94	VJR0646	TEST POINT	2	
TP220-23	VJR0646	TEST POINT	4	
TP340-49	EYF6CU	TEST POINT	10	
VR260,61	EVMEGSA00B13	V.RESISTOR 1K	2	
X220	VSX0967	CRYSTAL OSCILLATOR	1	
X221	VSX0968	CRYSTAL OSCILLATOR	1	
X530	VSX0519	CRYSTAL OSCILLATOR	1	
X820	VSX0968	CRYSTAL OSCILLATOR	1	
		MISCELLANEOUS		
	VML2143	CARD PULLER	1	
	VML2144	CARD PULLER	1	
■E8	VEP84301B	F8 A AD/DA P.C.BOARD	1	(RTL)
C4001,02	ECUM1E104ZFN	C.CAPACITOR CH 25V 0.1U	2	
C4003	ECEA1HGE330	E.CAPACITOR 50V 33U	1	
C4004	ECUM1E104ZFN	C.CAPACITOR CH 25V 0.1U	1	
C4005	ECEV1CV470Q	E.CAPACITOR CH 16V 47U	1	
C4006	ECUM1E104ZFN	C.CAPACITOR CH 25V 0.1U	1	
C4007	ECEV1CV470Q	E.CAPACITOR CH 16V 47U	1	
C4009	ECEA1HGE330	E.CAPACITOR 50V 33U	1	
C4011	ECUM1H820JCN	C.CAPACITOR CH 50V 82P	1	
C4012	ECEV1CN100Q	E.CAPACITOR CH 16V 10U	1	
C4013	ECUM1E104ZFN	C.CAPACITOR CH 25V 0.1U	1	
C4014	ECHU1C472G	P.CAPACITOR 16V 4700P	1	
C4015	ECUM1H330JCN	C.CAPACITOR CH 50V 33P	1	
C4016,17	ECUM1H103KBN	C.CAPACITOR CH 50V 0.01U	2	
C4018	ECUX1H561JCN	C.CAPACITOR CH 50V 560P	1	
C4019	ECUM1H182KBN	C.CAPACITOR CH 50V 1800P	1	
C4020	ECUM1H101JCN	C.CAPACITOR CH 50V 100P	1	
C4021	ECEV1CN100Q	E.CAPACITOR CH 16V 10U	1	
C4041,42	ECUM1E104ZFN	C.CAPACITOR CH 25V 0.1U	2	
C4043	ECEA1HGE330	E.CAPACITOR 50V 33U	1	
C4044,45	ECUM1E104ZFN	C.CAPACITOR CH 25V 0.1U	2	
C4046,47	ECEV1CV470Q	E.CAPACITOR CH 16V 47U	2	
C4049	ECEA1HGE330	E.CAPACITOR 50V 33U	1	
C4051	ECUM1H820JCN	C.CAPACITOR CH 50V 82P	1	

Ref.No.	Part No.	Part Name & Description	Pcs	Remarks
C4052	ECUM1E104ZFN	C.CAPACITOR CH 25V 0.1U	1	
C4053	ECEV1CN100Q	E.CAPACITOR CH 16V 10U	1	
C4054	ECHU1C472G	P.CAPACITOR 16V 4700P	1	
C4055	ECUM1H330JCN	C.CAPACITOR CH 50V 33P	1	
C4056,57	ECUM1H103KBN	C.CAPACITOR CH 50V 0.01U	2	
C4058	ECUX1H561JCN	C.CAPACITOR CH 50V 560P	1	
C4059	ECUM1H182KBN	C.CAPACITOR CH 50V 1800P	1	
C4060	ECUM1H101JCN	C.CAPACITOR CH 50V 100P	1	
C4061	ECEV1CN100Q	E.CAPACITOR CH 16V 10U	1	
C4201,02	ECUM1E104ZFN	C.CAPACITOR CH 25V 0.1U	2	
C4203	ECEV0JV101Q	E.CAPACITOR CH6.3V 100U	1	
C4204	ECUM1E104ZFN	C.CAPACITOR CH 25V 0.1U	1	
C4205	ECEV1CV100Q	E.CAPACITOR CH 16V 10U	1	
C4206	ECUM1E104ZFN	C.CAPACITOR CH 25V 0.1U	1	
C4207	ECEV1CV100Q	E.CAPACITOR CH 16V 10U	1	
C4208,09	ECEV1CV220Q	E.CAPACITOR CH 16V 22U	2	
C4211	ECUM1H330JCN	C.CAPACITOR CH 50V 33P	1	
C4212	ECUM1E104ZFN	C.CAPACITOR CH 25V 0.1U	1	
C4213	ECEV0JV470Q	E.CAPACITOR CH6.3V 47U	1	
C4214	ECUM1H330JCN	C.CAPACITOR CH 50V 33P	1	
C4215	ECUM1E104ZFN	C.CAPACITOR CH 25V 0.1U	1	
C4216	ECEV0JV470Q	E.CAPACITOR CH6.3V 47U	1	
C4217,18	ECUM1H330JCN	C.CAPACITOR CH 50V 33P	2	
C4219,20	ECUM1H152KBN	C.CAPACITOR CH 50V 1500P	2	
C4221,22	ECEV1CV100Q	E.CAPACITOR CH 16V 10U	2	
C4223-26	ECUM1E104ZFN	C.CAPACITOR CH 25V 0.1U	4	
C4227	ECEV1CV100Q	E.CAPACITOR CH 16V 10U	1	
C4228	ECUM1E104ZFN	C.CAPACITOR CH 25V 0.1U	1	
C4301	ECEV1CV470Q	E.CAPACITOR CH 16V 47U	1	
C4302	ECUM1E104ZFN	C.CAPACITOR CH 25V 0.1U	1	
C4303	ECEV0JV101Q	E.CAPACITOR CH6.3V 100U	1	
C4304	ECUM1E104ZFN	C.CAPACITOR CH 25V 0.1U	1	
C4305	ECEV1CV100Q	E.CAPACITOR CH 16V 10U	1	
C4306	ECEV1CV220Q	E.CAPACITOR CH 16V 22U	1	
C4307	ECUM1E104ZFN	C.CAPACITOR CH 25V 0.1U	1	
C4308	ECEV1CV220Q	E.CAPACITOR CH 16V 22U	1	
C4309	ECUM1E104ZFN	C.CAPACITOR CH 25V 0.1U	1	
C4310	ECUM1H103KBN	C.CAPACITOR CH 50V 0.01U	1	
C4311-13	ECUM1E104ZFN	C.CAPACITOR CH 25V 0.1U	3	
C4314	ECEV1CV100Q	E.CAPACITOR CH 16V 10U	1	
C4315	ECUM1E104ZFN	C.CAPACITOR CH 25V 0.1U	1	
C4316	ECEV0JV101Q	E.CAPACITOR CH6.3V 100U	1	
C4317,18	ECEV1CN100Q	E.CAPACITOR CH 16V 10U	2	
C4319,20	ECUM1H103KBN	C.CAPACITOR CH 50V 0.01U	2	
C4321,22	ECUM1H221JCN	C.CAPACITOR CH 50V 220P	2	
C4323,24	ECUM1H103KBN	C.CAPACITOR CH 50V 0.01U	2	
C4325	ECUM1E104ZFN	C.CAPACITOR CH 25V 0.1U	1	
C4401	ECHU1C472G	P.CAPACITOR 16V 4700P	1	
C4402,03	ECUM1E104ZFN	C.CAPACITOR CH 25V 0.1U	2	
C4404	ECEV1CN100Q	E.CAPACITOR CH 16V 10U	1	
C4405,06	ECUM1E104ZFN	C.CAPACITOR CH 25V 0.1U	2	
C4407,08	ECEV1CV470Q	E.CAPACITOR CH 16V 47U	2	
C4409,10	ECUM1H103KBN	C.CAPACITOR CH 50V 0.01U	2	
C4411	ECEV1CV100Q	E.CAPACITOR CH 16V 10U	1	
C4412	ECUM1H470JCN	C.CAPACITOR CH 50V 47P	1	
C4413	ECUM1H103KBN	C.CAPACITOR CH 50V 0.01U	1	
C4414,15	ECEV1CV100Q	E.CAPACITOR CH 16V 10U	2	
C4416	ECUM1H270JCN	C.CAPACITOR CH 50V 27P	1	
C4417	ECUM1H103KBN	C.CAPACITOR CH 50V 0.01U	1	
C4418	ECEV1CV100Q	E.CAPACITOR CH 16V 10U	1	
C4419,20	ECEA1CGE221	E.CAPACITOR 16V 220U	2	
C4421	ECEV1CV220Q	E.CAPACITOR CH 16V 22U	1	
C4422	ECUM1H103KBN	C.CAPACITOR CH 50V 0.01U	1	
C4423	ECEV1CV220Q	E.CAPACITOR CH 16V 22U	1	
C4424	ECUM1H103KBN	C.CAPACITOR CH 50V 0.01U	1	
C4425,26	ECEV1CV220Q	E.CAPACITOR CH 16V 22U	2	
C4427,28	ECUM1H103KBN	C.CAPACITOR CH 50V 0.01U	2	
C4429,30	ECEV1CV470Q	E.CAPACITOR CH 16V 47U	2	
C4476	ECHU1C472G	P.CAPACITOR 16V 4700P	1	
C4477	ECEV1CN100Q	E.CAPACITOR CH 16V 10U	1	
C4478,79	ECUM1H103KBN	C.CAPACITOR CH 50V 0.01U	2	
C4480	ECUM1H270JCN	C.CAPACITOR CH 50V 27P	1	
C4481	ECEV1CV100Q	E.CAPACITOR CH 16V 10U	1	
C4482	ECUM1H470JCN	C.CAPACITOR CH 50V 47P	1	
C4483	ECUM1H103KBN	C.CAPACITOR CH 50V 0.01U	1	

Ref.No.	Part No.	Part Name & Description	Pcs	Remarks
C4484,85	ECEV1CV100Q	E.CAPACITOR CH 16V 10U	2	
C4486	ECUM1H103KBN	C.CAPACITOR CH 50V 0.01U	1	
C4487	ECEV1CV100Q	E.CAPACITOR CH 16V 10U	1	
C4488,89	ECEA1CGE221	E.CAPACITOR 16V 220U	2	
C4490,91	ECEV1CV220Q	E.CAPACITOR CH 16V 22U	2	
C4492,93	ECUM1H103KBN	C.CAPACITOR CH 50V 0.01U	2	
C4494,95	ECEV1CV220Q	E.CAPACITOR CH 16V 22U	2	
C4496,97	ECUM1H103KBN	C.CAPACITOR CH 50V 0.01U	2	
C4701-04	ECUM1E104ZFN	C.CAPACITOR CH 25V 0.1U	4	
C4705	ECEV1CV470Q	E.CAPACITOR CH 16V 47U	1	
C4706-10	ECUM1E104ZFN	C.CAPACITOR CH 25V 0.1U	5	
C4711	ECEV0JV101Q	E.CAPACITOR CH6.3V 100U	1	
C4712-14	ECUM1E104ZFN	C.CAPACITOR CH 25V 0.1U	3	
C4715-18	ECEV1CV470Q	E.CAPACITOR CH 16V 47U	4	
C4720	ECEV1CV220Q	E.CAPACITOR CH 16V 22U	1	
C4721	ECUM1E104ZFN	C.CAPACITOR CH 25V 0.1U	1	
C4722	ECEV1CV220Q	E.CAPACITOR CH 16V 22U	1	
C4723,24	ECUM1E104ZFN	C.CAPACITOR CH 25V 0.1U	2	
C4725	ECEV1CV100Q	E.CAPACITOR CH 16V 10U	1	
C4726	ECUM1E104ZFN	C.CAPACITOR CH 25V 0.1U	1	
C4727	ECUM1H103KBN	C.CAPACITOR CH 50V 0.01U	1	
C4728	ECEV0JV101Q	E.CAPACITOR CH6.3V 100U	1	
C4729,30	ECEV1CN100Q	E.CAPACITOR CH 16V 10U	2	
C4731,32	ECUM1H221JCN	C.CAPACITOR CH 50V 220P	2	
C4733-36	ECUM1H103KBN	C.CAPACITOR CH 50V 0.01U	4	
C4737,38	ECHU1C472G	P.CAPACITOR 16V 4700P	2	
C4739,40	ECEV1CN100Q	E.CAPACITOR CH 16V 10U	2	
C4745	ECUM1H101JCN	C.CAPACITOR CH 50V 100P	1	
C4751	ECUM1E104ZFN	C.CAPACITOR CH 25V 0.1U	1	
C4752	ECEV1CV220Q	E.CAPACITOR CH 16V 22U	1	
C4754,55	ECEV1CV470Q	E.CAPACITOR CH 16V 47U	2	
C4756	ECUM1H820JCN	C.CAPACITOR CH 50V 82P	1	
C4757	ECUM1E104ZFN	C.CAPACITOR CH 25V 0.1U	1	
C4758	ECEV1CN100Q	E.CAPACITOR CH 16V 10U	1	
C4759,60	ECUM1E104ZFN	C.CAPACITOR CH 25V 0.1U	2	
C4761,62	ECUM1H103KBN	C.CAPACITOR CH 50V 0.01U	2	
C4763	ECUM1H270JCN	C.CAPACITOR CH 50V 27P	1	
C4764	ECUM1H470JCN	C.CAPACITOR CH 50V 47P	1	
C4765,66	ECUM1H103KBN	C.CAPACITOR CH 50V 0.01U	2	
C4767-70	ECEV1CV100Q	E.CAPACITOR CH 16V 10U	4	
C4771,72	ECEA1CGE221	E.CAPACITOR 16V 220U	2	
C4773	ECEV1CV220Q	E.CAPACITOR CH 16V 22U	1	
C4774	ECUM1H103KBN	C.CAPACITOR CH 50V 0.01U	1	
C4775,76	ECEV1CV220Q	E.CAPACITOR CH 16V 22U	2	
C4777	ECUM1H103KBN	C.CAPACITOR CH 50V 0.01U	1	
C4778	ECEV1CV220Q	E.CAPACITOR CH 16V 22U	1	
C4779,80	ECUM1H103KBN	C.CAPACITOR CH 50V 0.01U	2	
C4831	ECUM1H820JCN	C.CAPACITOR CH 50V 82P	1	
C4832	ECEV1CN100Q	E.CAPACITOR CH 16V 10U	1	
C4833-35	ECUM1E104ZFN	C.CAPACITOR CH 25V 0.1U	3	
C4836,37	ECUM1H103KBN	C.CAPACITOR CH 50V 0.01U	2	
C4838	ECUM1H470JCN	C.CAPACITOR CH 50V 47P	1	
C4839	ECUM1H103KBN	C.CAPACITOR CH 50V 0.01U	1	
C4840	ECUM1H270JCN	C.CAPACITOR CH 50V 27P	1	
C4841	ECUM1H103KBN	C.CAPACITOR CH 50V 0.01U	1	
C4842-45	ECEV1CV100Q	E.CAPACITOR CH 16V 10U	4	
C4846,47	ECEA1CGE221	E.CAPACITOR 16V 220U	2	
C4848	ECEV1CV220Q	E.CAPACITOR CH 16V 22U	1	
C4849	ECUM1H103KBN	C.CAPACITOR CH 50V 0.01U	1	
C4850	ECEV1CV220Q	E.CAPACITOR CH 16V 22U	1	
C4851	ECUM1H103KBN	C.CAPACITOR CH 50V 0.01U	1	
C4852,53	ECEV1CV220Q	E.CAPACITOR CH 16V 22U	2	
C4854,55	ECUM1H103KBN	C.CAPACITOR CH 50V 0.01U	2	
C4901,02	ECUM1E104ZFN	C.CAPACITOR CH 25V 0.1U	2	
C4903,04	ECUX1H102JCN	C.CAPACITOR CH 50V 1000P	2	
C4905	ECEV0JV101Q	E.CAPACITOR CH6.3V 100U	1	
C4906	ECUM1H103KBN	C.CAPACITOR CH 50V 0.01U	1	
C4907	ECEV0JV101Q	E.CAPACITOR CH6.3V 100U	1	
C4908	ECUM1H103KBN	C.CAPACITOR CH 50V 0.01U	1	
C4931	ECEV1CV470Q	E.CAPACITOR CH 16V 47U	1	
C4932	ECUM1H103ZFN	C.CAPACITOR CH 50V 0.01U	1	
C4933-36	ECUM1H103KBN	C.CAPACITOR CH 50V 0.01U	4	
C4937-39	ECUM1H103ZFN	C.CAPACITOR CH 50V 0.01U	3	
C4940	ECUM1H103KBN	C.CAPACITOR CH 50V 0.01U	1	

Ref.No.	Part No.	Part Name & Description	Pcs	Remarks
D4001,02	MA157	DIODE	2	
D4041,42	MA157	DIODE	2	
D4401,02	MA157	DIODE	2	
D4476,77	MA157	DIODE	2	
D4751	MA157	DIODE	1	
D4752,53	MA152WK	DIODE	2	
D4754,55	MA157	DIODE	2	
D4831,32	MA157	DIODE	2	
FL4931	VLF0941C223	FILTER	1	
IC4001	NJM4580ED	IC	1	
IC4002	MC14052BF	IC	1	
IC4003	NJM79L09UA	IC	1	
IC4004	NJM78L09UA	IC	1	
IC4005	NJM4580ED	IC	1	
IC4006	AD7945BR	IC	1	
IC4007,08	NJM4580ED	IC	2	
IC4009	MC14052BF	IC	1	
IC4041,42	NJM4580ED	IC	2	
IC4043	NJM78L09UA	IC	1	
IC4044	NJM79L09UA	IC	1	
IC4045,46	NJM4580ED	IC	2	
IC4047	MC14052BF	IC	1	
IC4048	AD7945BR	IC	1	
IC4049	MC14052BF	IC	1	
IC4201	MC74HC541AF	IC	1	
IC4202	NJM78L05UA	IC	1	
IC4203,04	NJM2100MD	IC	2	
IC4205	AK5340VS	IC	1	
IC4301	NJM78L05UA	IC	1	
IC4302	AK4320VM	IC	1	
IC4303,04	NJM4580ED	IC	2	
IC4305	MC74HC157AF	IC	1	
IC4306	TC7W74F	IC	1	
IC4307,08	TC4W53F	IC	2	
IC4401	NJM4580ED	IC	1	
IC4402	NJM79L05UA	IC	1	
IC4403	NJM78L05UA	IC	1	
IC4404	NJM4580ED	IC	1	
IC4405	NJM2043MD	IC	1	
IC4406	MC14052BF	IC	1	
IC4407,08	AQV212SX	IC	2	
IC4476,77	NJM4580ED	IC	2	
IC4478	NJM2043MD	IC	1	
IC4479	MC14052BF	IC	1	
IC4480,81	AQV212SX	IC	2	
IC4701	NJM78L05UA	IC	1	
IC4702	AK4320VM	IC	1	
IC4703,04	NJM4580ED	IC	2	
IC4707	NJM78L09UA	IC	1	
IC4708,09	NJM79L09UA	IC	2	
IC4710	NJM78L09UA	IC	1	
IC4711	MC74HC541AF	IC	1	
IC4712,13	TC4W53F	IC	2	
IC4751,52	NJM4580ED	IC	2	
IC4753	NJM2043MD	IC	1	
IC4754	AD7945BR	IC	1	
IC4755	MC14053BF	IC	1	
IC4756	MC14052BF	IC	1	
IC4757,58	AQV212SX	IC	2	
IC4831,32	NJM4580ED	IC	2	
IC4833	NJM2043MD	IC	1	
IC4834	AD7945BR	IC	1	
IC4835	MC14053BF	IC	1	
IC4836	MC14052BF	IC	1	
IC4837,38	AQV212SX	IC	2	
IC4901	NJM4556AM	IC	1	
IC4931,32	SN74S1051NS	IC	2	
IC4933	74F245SJ	IC	1	
IC4934	74F541SJ	IC	1	
IC4935	74AC139SJ	IC	1	
IC4936	74F11SJ	IC	1	
IC4937	TC7S04F	IC	1	
IC4938-40	UPD71055GB	IC	3	

Ref.No.	Part No.	Part Name & Description	Pcs	Remarks
L4201	VLQ0163J100	COIL 10UH	1	
L4301	VLQ0163J100	COIL 10UH	1	
L4701	VLQ0163J100	COIL 10UH	1	
P4001,02	VJP3454B096	CONNECTOR (MALE)	2	
Q4003	2SD1328	TRANSISTOR	1	
Q4041	2SD1328	TRANSISTOR	1	
Q4301,02	2SK198-R	TRANSISTOR	2	
Q4401	2SD1328	TRANSISTOR	1	
Q4402	2SB1322A-R	TRANSISTOR	1	
Q4403	2SD1994A-R	TRANSISTOR	1	
Q4404	2SB1322A-R	TRANSISTOR	1	
Q4405	2SD1994A-R	TRANSISTOR	1	
Q4406	2SB710A-R	TRANSISTOR	1	
Q4407	2SD602A-R	TRANSISTOR	1	
Q4476	2SD1328	TRANSISTOR	1	
Q4477	2SB1322A-R	TRANSISTOR	1	
Q4478	2SD1994A-R	TRANSISTOR	1	
Q4479	2SB1322A-R	TRANSISTOR	1	
Q4480	2SD1994A-R	TRANSISTOR	1	
Q4481	2SB710A-R	TRANSISTOR	1	
Q4482	2SD602A-R	TRANSISTOR	1	
Q4701,02	2SD1328	TRANSISTOR	2	
Q4703,04	2SK198-R	TRANSISTOR	2	
Q4751-54	2SB710A-R	TRANSISTOR	4	
Q4755	2SD1994A-R	TRANSISTOR	1	
Q4756	2SB1322A-R	TRANSISTOR	1	
Q4757	2SD1994A-R	TRANSISTOR	1	
Q4758	2SB1322A-R	TRANSISTOR	1	
Q4759	2SD602A-R	TRANSISTOR	1	
Q4760	2SB710A-R	TRANSISTOR	1	
Q4831	2SD1994A-R	TRANSISTOR	1	
Q4832	2SB1322A-R	TRANSISTOR	1	
Q4833	2SD1994A-R	TRANSISTOR	1	
Q4834	2SB1322A-R	TRANSISTOR	1	
Q4835	2SD602A-R	TRANSISTOR	1	
Q4836	2SB710A-R	TRANSISTOR	1	
Q4901-04	2SD1328	TRANSISTOR	4	
QR4001	UN2213	TRANSISTOR-RESISTOR	1	
QR4002	UN2113	TRANSISTOR-RESISTOR	1	
QR4041	UN2213	TRANSISTOR-RESISTOR	1	
QR4042	UN2113	TRANSISTOR-RESISTOR	1	
QR4301	UN2213	TRANSISTOR-RESISTOR	1	
QR4302	UN2113	TRANSISTOR-RESISTOR	1	
QR4303	UN2213	TRANSISTOR-RESISTOR	1	
QR4401	UN2213	TRANSISTOR-RESISTOR	1	
QR4402	UN2113	TRANSISTOR-RESISTOR	1	
QR4476	UN2213	TRANSISTOR-RESISTOR	1	
QR4477	UN2113	TRANSISTOR-RESISTOR	1	
QR4701-03	UN2213	TRANSISTOR-RESISTOR	3	
QR4704,05	UN2113	TRANSISTOR-RESISTOR	2	
QR4751,52	UN2213	TRANSISTOR-RESISTOR	2	
R4001	ERJ6RBD202	M.RESISTOR CH 1/10W 2K	1	
R4002	ERJ6RBD332	M.RESISTOR CH 1/10W 3.3K	1	
R4003	ERJ6RBD333	M.RESISTOR CH 1/10W 33K	1	
R4004	ERJ12YJ621	M.RESISTOR CH 1/2W 620	1	
R4005	ERJ6RBD223	M.RESISTOR CH 1/10W 22K	1	
R4006	ERJ6RBD123	M.RESISTOR CH 1/10W 12K	1	
R4007,08	ERJ6RBD473	M.RESISTOR CH 1/10W 47K	2	
R4009	ERJ6RBD123	M.RESISTOR CH 1/10W 12K	1	
R4010	ERJ6RBD333	M.RESISTOR CH 1/10W 33K	1	
R4011	ERJ6RBD332	M.RESISTOR CH 1/10W 3.3K	1	
R4012	ERJ6RBD202	M.RESISTOR CH 1/10W 2K	1	
R4013,14	ERJ6RBD472	M.RESISTOR CH 1/10W 4.7K	2	
R4015	ERJ6RED470	M.RESISTOR CH 1/10W 47	1	
R4016,17	ERJ6RBD472	M.RESISTOR CH 1/10W 4.7K	2	
R4018	ERJ6GEYG103	M.RESISTOR CH 1/10W 10K	1	
R4019	ERJ6GEYG102	M.RESISTOR CH 1/10W 1K	1	
R4020	ERJ6GEYG104	M.RESISTOR CH 1/10W 100K	1	
R4021	ERJ6GEYG683	M.RESISTOR CH 1/10W 68K	1	
R4022	ERJ6GEYG103	M.RESISTOR CH 1/10W 10K	1	

Ref.No.	Part No.	Part Name & Description	Pcs	Remarks
R4023	ERJ6RBD102	M.RESISTOR CH 1/10W 1K	1	
R4024	ERJ6GEYG105	M.RESISTOR CH 1/10W 1M	1	
R4025	ERJ6RBD222	M.RESISTOR CH 1/10W 2.2K	1	
R4026,27	ERJ6RBD153	M.RESISTOR CH 1/10W 15K	2	
R4028	ERJ6GEYF472	M.RESISTOR CH 1/10W 4.7K	1	
R4029	ERJ6RBD472	M.RESISTOR CH 1/10W 4.7K	1	
R4030	ERJ6GEYG103	M.RESISTOR CH 1/10W 10K	1	
R4031,32	ERJ6RBD472	M.RESISTOR CH 1/10W 4.7K	2	
R4033	ERJ6GEYG103	M.RESISTOR CH 1/10W 10K	1	
R4034	ERJ6GEYG182	M.RESISTOR CH 1/10W 1.8K	1	
R4035	ERJ6GEYG103	M.RESISTOR CH 1/10W 10K	1	
R4037	ERJ6GEYG103	M.RESISTOR CH 1/10W 10K	1	
R4041	ERJ12YJ621	M.RESISTOR CH 1/2W 620	1	
R4042	ERJ6RBD333	M.RESISTOR CH 1/10W 33K	1	
R4043	ERJ6RBD332	M.RESISTOR CH 1/10W 3.3K	1	
R4044	ERJ6RBD202	M.RESISTOR CH 1/10W 2K	1	
R4045	ERJ6RBD223	M.RESISTOR CH 1/10W 22K	1	
R4046,47	ERJ6RBD473	M.RESISTOR CH 1/10W 47K	2	
R4048,49	ERJ6RBD123	M.RESISTOR CH 1/10W 12K	2	
R4050	ERJ6RBD202	M.RESISTOR CH 1/10W 2K	1	
R4051	ERJ6RBD332	M.RESISTOR CH 1/10W 3.3K	1	
R4052	ERJ6RBD333	M.RESISTOR CH 1/10W 33K	1	
R4053-56	ERJ6RBD472	M.RESISTOR CH 1/10W 4.7K	4	
R4057	ERJ6RED470	M.RESISTOR CH 1/10W 47	1	
R4058	ERJ6GEYG103	M.RESISTOR CH 1/10W 10K	1	
R4059	ERJ6GEYG182	M.RESISTOR CH 1/10W 1.8K	1	
R4060	ERJ6GEYG103	M.RESISTOR CH 1/10W 10K	1	
R4061	ERJ6GEYG102	M.RESISTOR CH 1/10W 1K	1	
R4062	ERJ6GEYG104	M.RESISTOR CH 1/10W 100K	1	
R4063	ERJ6GEYG683	M.RESISTOR CH 1/10W 68K	1	
R4064	ERJ6GEYG103	M.RESISTOR CH 1/10W 10K	1	
R4065	ERJ6GEYG105	M.RESISTOR CH 1/10W 1M	1	
R4066	ERJ6RBD102	M.RESISTOR CH 1/10W 1K	1	
R4067	ERJ6RBD222	M.RESISTOR CH 1/10W 2.2K	1	
R4068,69	ERJ6RBD153	M.RESISTOR CH 1/10W 15K	2	
R4070	ERJ6GEYF472	M.RESISTOR CH 1/10W 4.7K	1	
R4071	ERJ6GEYG103	M.RESISTOR CH 1/10W 10K	1	
R4072-74	ERJ6RBD472	M.RESISTOR CH 1/10W 4.7K	3	
R4075	ERJ6GEYG103	M.RESISTOR CH 1/10W 10K	1	
R4077	ERJ6GEYG103	M.RESISTOR CH 1/10W 10K	1	
R4201	ERJ6GEYG331	M.RESISTOR CH 1/10W 330	1	
R4202	ERJ6GEYG103	M.RESISTOR CH 1/10W 10K	1	
R4203	ERJ6GEYF472	M.RESISTOR CH 1/10W 4.7K	1	
R4204	ERJ6GEYG331	M.RESISTOR CH 1/10W 330	1	
R4205	ERJ6GEYG103	M.RESISTOR CH 1/10W 10K	1	
R4206	ERJ6RBD103	M.RESISTOR CH 1/10W 10K	1	
R4207	ERJ6GEYJ100	M.RESISTOR CH 1/10W 10	1	
R4208	ERJ6RBD103	M.RESISTOR CH 1/10W 10K	1	
R4209	ERJ6GEYF472	M.RESISTOR CH 1/10W 4.7K	1	
R4210	ERJ6GEYJ100	M.RESISTOR CH 1/10W 10	1	
R4211,12	ERJ6GEYF472	M.RESISTOR CH 1/10W 4.7K	2	
R4214-18	ERJ6RBD103	M.RESISTOR CH 1/10W 10K	5	
R4219,20	ERJ6RBD331	M.RESISTOR CH 1/10W 330	2	
R4221	ERJ6RBD103	M.RESISTOR CH 1/10W 10K	1	
R4222,23	ERJ6RBD331	M.RESISTOR CH 1/10W 330	2	
R4227-30	ERJ6GEY0R00	M.RESISTOR CH 1/10W 0	4	
R4231	VLQ0576	COIL	1	
R4232	ERJ6GEY0R00	M.RESISTOR CH 1/10W 0	1	
R4301	ERJ6GEY0R00	M.RESISTOR CH 1/10W 0	1	
R4302	ERJ6GEYF473	M.RESISTOR CH 1/10W 47K	1	
R4303	ERJ6GEY0R00	M.RESISTOR CH 1/10W 0	1	
R4304-06	ERJ6GEYF473	M.RESISTOR CH 1/10W 47K	3	
R4307	ERJ6GEY0R00	M.RESISTOR CH 1/10W 0	1	
R4308-11	ERJ6GEYF473	M.RESISTOR CH 1/10W 47K	4	
R4314	ERJ6GEYF472	M.RESISTOR CH 1/10W 4.7K	1	
R4316-18	ERJ6GEYF472	M.RESISTOR CH 1/10W 4.7K	3	
R4319,20	ERJ6GEYG273	M.RESISTOR CH 1/10W 27K	2	
R4321	ERJ6RBD391	M.RESISTOR CH 1/10W 390	1	
R4322	ERJ6RBD222	M.RESISTOR CH 1/10W 2.2K	1	
R4323	ERJ6RBD103	M.RESISTOR CH 1/10W 10K	1	
R4324	ERJ6RBD391	M.RESISTOR CH 1/10W 390	1	
R4325	ERJ6RBD222	M.RESISTOR CH 1/10W 2.2K	1	
R4326	ERJ6RBD103	M.RESISTOR CH 1/10W 10K	1	
R4327	ERJ6RBD682	M.RESISTOR CH 1/10W 6.8K	1	
R4328	ERJ6RBD392	M.RESISTOR CH 1/10W 3.9K	1	

Ref.No.	Part No.	Part Name & Description	Pcs	Remarks
R4329	ERJ6RBD561	M.RESISTOR CH 1/10W 560	1	
R4330	ERJ6GEYG105	M.RESISTOR CH 1/10W 1M	1	
R4331	ERJ6RBD682	M.RESISTOR CH 1/10W 6.8K	1	
R4332	ERJ6RBD392	M.RESISTOR CH 1/10W 3.9K	1	
R4333	ERJ6RBD561	M.RESISTOR CH 1/10W 560	1	
R4334	ERJ6GEYG105	M.RESISTOR CH 1/10W 1M	1	
R4335,36	ERJ6GEYG103	M.RESISTOR CH 1/10W 10K	2	
R4337	ERJ6GEYG683	M.RESISTOR CH 1/10W 68K	1	
R4401	ERJ6GEYG104	M.RESISTOR CH 1/10W 100K	1	
R4402	ERJ6GEYG103	M.RESISTOR CH 1/10W 10K	1	
R4403	ERJ6RBD223	M.RESISTOR CH 1/10W 22K	1	
R4404	ERJ6RBD222	M.RESISTOR CH 1/10W 2.2K	1	
R4405	ERJ6RBD102	M.RESISTOR CH 1/10W 1K	1	
R4406	ERJ6GEYG105	M.RESISTOR CH 1/10W 1M	1	
R4407	ERJ6GEYG683	M.RESISTOR CH 1/10W 68K	1	
R4408	ERJ6RBD123	M.RESISTOR CH 1/10W 12K	1	
R4409	ERJ6GEYF472	M.RESISTOR CH 1/10W 4.7K	1	
R4410	ERJ6GEYG102	M.RESISTOR CH 1/10W 1K	1	
R4411	ERJ6GEYG103	M.RESISTOR CH 1/10W 10K	1	
R4412	ERJ6RBD301	M.RESISTOR CH 1/10W 300	1	
R4413	ERJ6RBD272	M.RESISTOR CH 1/10W 2.7K	1	
R4414	ERJ6RBD472	M.RESISTOR CH 1/10W 4.7K	1	
R4415	ERJ6RBD123	M.RESISTOR CH 1/10W 12K	1	
R4416	ERJ6RBD102	M.RESISTOR CH 1/10W 1K	1	
R4417	ERJ6RBD103	M.RESISTOR CH 1/10W 10K	1	
R4418	ERJ6GEYG563	M.RESISTOR CH 1/10W 56K	1	
R4419	ERJ6GEYF472	M.RESISTOR CH 1/10W 4.7K	1	
R4420	ERJ6RBD682	M.RESISTOR CH 1/10W 6.8K	1	
R4421-24	ERJ6RBD472	M.RESISTOR CH 1/10W 4.7K	4	
R4425	ERJ6GEYG562	M.RESISTOR CH 1/10W 5.6K	1	
R4426	ERJ6GEYG105	M.RESISTOR CH 1/10W 1M	1	
R4427	ERJ6GEYJ100	M.RESISTOR CH 1/10W 10	1	
R4428,29	ERJ6RBD153	M.RESISTOR CH 1/10W 15K	2	
R4430	ERJ6RED150	M.RESISTOR CH 1/10W 15	1	
R4431	ERJ6RBD153	M.RESISTOR CH 1/10W 15K	1	
R4433	ERJ6GEYG562	M.RESISTOR CH 1/10W 5.6K	1	
R4434	ERJ6GEYG105	M.RESISTOR CH 1/10W 1M	1	
R4435	ERJ6GEYJ100	M.RESISTOR CH 1/10W 10	1	
R4436	ERJ6RBD153	M.RESISTOR CH 1/10W 15K	1	
R4437,38	ERJ6GEYG562	M.RESISTOR CH 1/10W 5.6K	2	
R4439,40	ERJ14YJ100	M.RESISTOR CH 1/4W 10	2	
R4441	ERJ14YJ220	M.RESISTOR CH 1/4W 22	1	
R4442,43	ERJ14YJ100	M.RESISTOR CH 1/4W 10	2	
R4444	ERJ14YJ220	M.RESISTOR CH 1/4W 22	1	
R4445,46	ERJ6GEYG103	M.RESISTOR CH 1/10W 10K	2	
R4447,48	ERJ6GEYG102	M.RESISTOR CH 1/10W 1K	2	
R4449	ERJ6GEYG103	M.RESISTOR CH 1/10W 10K	1	
R4450,51	ERJ6GEYF561	M.RESISTOR CH 1/10W 560	2	
R4452	ERJ6GEYG103	M.RESISTOR CH 1/10W 10K	1	
R4453	ERJ6GEY0R00	M.RESISTOR CH 1/10W 0	1	
R4454	ERJ6RBD301	M.RESISTOR CH 1/10W 300	1	
R4455	ERJ6RBD512	M.RESISTOR CH 1/10W 5.1K	1	
R4456	ERJ6RBD472	M.RESISTOR CH 1/10W 4.7K	1	
R4461	ERJ6GEYJ335	M.RESISTOR CH 1/10W 3.3M	1	
R4462	ERJ6RED470	M.RESISTOR CH 1/10W 47	1	
R4463	ERJ6RBD911	M.RESISTOR CH 1/10W 910	1	
R4464	ERJ6GEYJ335	M.RESISTOR CH 1/10W 3.3M	1	
R4465	ERJ6RBD911	M.RESISTOR CH 1/10W 910	1	
R4466	ERJ6RED470	M.RESISTOR CH 1/10W 47	1	
R4467	ERJ6RBD123	M.RESISTOR CH 1/10W 12K	1	
R4468	ERJ6RBD151	M.RESISTOR CH 1/10W 150	1	
R4469	ERJ6RBD682	M.RESISTOR CH 1/10W 6.8K	1	
R4470	ERJ6RBD822	M.RESISTOR CH 1/10W 8.2K	1	
R4471	ERJ6RBD391	M.RESISTOR CH 1/10W 390	1	
R4472	ERJ6RBD202	M.RESISTOR CH 1/10W 2K	1	
R4473	ERJ6RBD153	M.RESISTOR CH 1/10W 15K	1	
R4476	ERJ6GEYG104	M.RESISTOR CH 1/10W 100K	1	
R4477	ERJ6RBD223	M.RESISTOR CH 1/10W 22K	1	
R4478	ERJ6RBD222	M.RESISTOR CH 1/10W 2.2K	1	
R4479	ERJ6GEYG683	M.RESISTOR CH 1/10W 68K	1	
R4480	ERJ6GEYG103	M.RESISTOR CH 1/10W 10K	1	
R4481	ERJ6RBD102	M.RESISTOR CH 1/10W 1K	1	
R4482	ERJ6GEYG105	M.RESISTOR CH 1/10W 1M	1	
R4483	ERJ6RBD123	M.RESISTOR CH 1/10W 12K	1	
R4484	ERJ6GEYF472	M.RESISTOR CH 1/10W 4.7K	1	

Ref.No.	Part No.	Part Name & Description	Pcs	Remarks
R4485	ERJ6GEYG102	M.RESISTOR CH 1/10W 1K	1	
R4486	ERJ6GEYG103	M.RESISTOR CH 1/10W 10K	1	
R4487	ERJ6RBD301	M.RESISTOR CH 1/10W 300	1	
R4488	ERJ6RBD272	M.RESISTOR CH 1/10W 2.7K	1	
R4489	ERJ6RBD472	M.RESISTOR CH 1/10W 4.7K	1	
R4490	ERJ6RBD123	M.RESISTOR CH 1/10W 12K	1	
R4491	ERJ6RBD102	M.RESISTOR CH 1/10W 1K	1	
R4492	ERJ6RBD103	M.RESISTOR CH 1/10W 10K	1	
R4493	ERJ6GEYG563	M.RESISTOR CH 1/10W 56K	1	
R4494	ERJ6GEYF472	M.RESISTOR CH 1/10W 4.7K	1	
R4495	ERJ6RBD682	M.RESISTOR CH 1/10W 6.8K	1	
R4496-99	ERJ6RBD472	M.RESISTOR CH 1/10W 4.7K	4	
R4500	ERJ6GEYG105	M.RESISTOR CH 1/10W 1M	1	
R4501	ERJ6GEYG562	M.RESISTOR CH 1/10W 5.6K	1	
R4502	ERJ6GEYG105	M.RESISTOR CH 1/10W 1M	1	
R4503	ERJ6GEYJ100	M.RESISTOR CH 1/10W 10	1	
R4504,05	ERJ6RBD153	M.RESISTOR CH 1/10W 15K	2	
R4506	ERJ6RED150	M.RESISTOR CH 1/10W 15	1	
R4507	ERJ6RBD153	M.RESISTOR CH 1/10W 15K	1	
R4509	ERJ6GEYG562	M.RESISTOR CH 1/10W 5.6K	1	
R4510	ERJ6GEYJ100	M.RESISTOR CH 1/10W 10	1	
R4511	ERJ6GEYG562	M.RESISTOR CH 1/10W 5.6K	1	
R4512	ERJ6RBD153	M.RESISTOR CH 1/10W 15K	1	
R4513	ERJ6GEYG562	M.RESISTOR CH 1/10W 5.6K	1	
R4514,15	ERJ14YJ100	M.RESISTOR CH 1/4W 10	2	
R4516	ERJ14YJ220	M.RESISTOR CH 1/4W 22	1	
R4517,18	ERJ14YJ100	M.RESISTOR CH 1/4W 10	2	
R4519	ERJ14YJ220	M.RESISTOR CH 1/4W 22	1	
R4520,21	ERJ6GEYG103	M.RESISTOR CH 1/10W 10K	2	
R4522,23	ERJ6GEYG102	M.RESISTOR CH 1/10W 1K	2	
R4524	ERJ6GEYF561	M.RESISTOR CH 1/10W 560	1	
R4525	ERJ6GEYG103	M.RESISTOR CH 1/10W 10K	1	
R4526	ERJ6GEYF561	M.RESISTOR CH 1/10W 560	1	
R4527	ERJ6GEYG103	M.RESISTOR CH 1/10W 10K	1	
R4528	ERJ6GEY0R00	M.RESISTOR CH 1/10W 0	1	
R4529	ERJ6RBD301	M.RESISTOR CH 1/10W 300	1	
R4530	ERJ6RBD512	M.RESISTOR CH 1/10W 5.1K	1	
R4531	ERJ6RBD472	M.RESISTOR CH 1/10W 4.7K	1	
R4536	ERJ6GEYJ335	M.RESISTOR CH 1/10W 3.3M	1	
R4537	ERJ6RED470	M.RESISTOR CH 1/10W 47	1	
R4538	ERJ6RBD911	M.RESISTOR CH 1/10W 910	1	
R4539	ERJ6GEYJ335	M.RESISTOR CH 1/10W 3.3M	1	
R4540	ERJ6RBD911	M.RESISTOR CH 1/10W 910	1	
R4541	ERJ6RED470	M.RESISTOR CH 1/10W 47	1	
R4542	ERJ6RBD123	M.RESISTOR CH 1/10W 12K	1	
R4543	ERJ6RBD151	M.RESISTOR CH 1/10W 150	1	
R4544	ERJ6RBD682	M.RESISTOR CH 1/10W 6.8K	1	
R4545	ERJ6RBD822	M.RESISTOR CH 1/10W 8.2K	1	
R4546	ERJ6RBD391	M.RESISTOR CH 1/10W 390	1	
R4547	ERJ6RBD202	M.RESISTOR CH 1/10W 2K	1	
R4548	ERJ6RBD153	M.RESISTOR CH 1/10W 15K	1	
R4701,02	ERJ6GEYF473	M.RESISTOR CH 1/10W 47K	2	
R4703,04	ERJ6GEY0R00	M.RESISTOR CH 1/10W 0	2	
R4705-10	ERJ6GEYF473	M.RESISTOR CH 1/10W 47K	6	
R4713,14	ERJ6GEYF472	M.RESISTOR CH 1/10W 4.7K	2	
R4716,17	ERJ6GEYF472	M.RESISTOR CH 1/10W 4.7K	2	
R4718,19	ERJ6GEYG273	M.RESISTOR CH 1/10W 27K	2	
R4720	ERJ6GEYG104	M.RESISTOR CH 1/10W 100K	1	
R4721	ERJ6GEYG683	M.RESISTOR CH 1/10W 68K	1	
R4722	ERJ6GEYG103	M.RESISTOR CH 1/10W 10K	1	
R4723	ERJ6GEYG104	M.RESISTOR CH 1/10W 100K	1	
R4724	ERJ6GEYG103	M.RESISTOR CH 1/10W 10K	1	
R4725	ERJ6GEYG683	M.RESISTOR CH 1/10W 68K	1	
R4726	ERJ6RBD223	M.RESISTOR CH 1/10W 22K	1	
R4727	ERJ6RBD222	M.RESISTOR CH 1/10W 2.2K	1	
R4728	ERJ6RBD102	M.RESISTOR CH 1/10W 1K	1	
R4729	ERJ6GEYG105	M.RESISTOR CH 1/10W 1M	1	
R4730	ERJ6RBD123	M.RESISTOR CH 1/10W 12K	1	
R4731	ERJ6RBD223	M.RESISTOR CH 1/10W 22K	1	
R4732	ERJ6RBD222	M.RESISTOR CH 1/10W 2.2K	1	
R4733	ERJ6RBD102	M.RESISTOR CH 1/10W 1K	1	
R4734	ERJ6GEYG105	M.RESISTOR CH 1/10W 1M	1	
R4735	ERJ6RBD123	M.RESISTOR CH 1/10W 12K	1	
R4736	ERJ6GEYF472	M.RESISTOR CH 1/10W 4.7K	1	
R4737	ERJ6GEYG102	M.RESISTOR CH 1/10W 1K	1	

Ref.No.	Part No.	Part Name & Description	Pcs	Remarks
R4738	ERJ6GEYF472	M.RESISTOR CH 1/10W 4.7K	1	
R4739	ERJ6GEYG102	M.RESISTOR CH 1/10W 1K	1	
R4740,41	ERJ6GEYG103	M.RESISTOR CH 1/10W 10K	2	
R4742	ERJ6RBD391	M.RESISTOR CH 1/10W 390	1	
R4743	ERJ6RBD222	M.RESISTOR CH 1/10W 2.2K	1	
R4744	ERJ6RBD103	M.RESISTOR CH 1/10W 10K	1	
R4745	ERJ6RBD391	M.RESISTOR CH 1/10W 390	1	
R4746	ERJ6RBD222	M.RESISTOR CH 1/10W 2.2K	1	
R4747	ERJ6RBD103	M.RESISTOR CH 1/10W 10K	1	
R4751	ERJ6GEYG104	M.RESISTOR CH 1/10W 100K	1	
R4752	ERJ6GEYF333	M.RESISTOR CH 1/10W 33K	1	
R4753	ERJ6GEYG103	M.RESISTOR CH 1/10W 10K	1	
R4754	ERJ6GEYF473	M.RESISTOR CH 1/10W 47K	1	
R4755	ERJ6GEYG103	M.RESISTOR CH 1/10W 10K	1	
R4756	ERJ6GEYG222	M.RESISTOR CH 1/10W 2.2K	1	
R4757,58	ERJ6GEYF473	M.RESISTOR CH 1/10W 47K	2	
R4759	ERJ6GEYG105	M.RESISTOR CH 1/10W 1M	1	
R4760	ERJ6GEYG104	M.RESISTOR CH 1/10W 100K	1	
R4761	ERJ6GEYG103	M.RESISTOR CH 1/10W 10K	1	
R4762	ERJ6GEYF473	M.RESISTOR CH 1/10W 47K	1	
R4763	ERJ6GEYG104	M.RESISTOR CH 1/10W 100K	1	
R4764	ERJ6GEY0R00	M.RESISTOR CH 1/10W 0	1	
R4765	ERJ6RBD102	M.RESISTOR CH 1/10W 1K	1	
R4766	ERJ6GEYG392	M.RESISTOR CH 1/10W 3.9K	1	
R4767	ERJ6RED220	M.RESISTOR CH 1/10W 22	1	
R4768	ERJ6GEYG103	M.RESISTOR CH 1/10W 10K	1	
R4769	ERJ6RBD301	M.RESISTOR CH 1/10W 300	1	
R4770	ERJ6RBD272	M.RESISTOR CH 1/10W 2.7K	1	
R4771	ERJ6RBD472	M.RESISTOR CH 1/10W 4.7K	1	
R4772	ERJ6RBD123	M.RESISTOR CH 1/10W 12K	1	
R4773	ERJ6RBD102	M.RESISTOR CH 1/10W 1K	1	
R4774	ERJ6RBD103	M.RESISTOR CH 1/10W 10K	1	
R4775-77	ERJ6GEY0R00	M.RESISTOR CH 1/10W 0	3	
R4778	ERJ6GEYG563	M.RESISTOR CH 1/10W 56K	1	
R4779	ERJ6RBD682	M.RESISTOR CH 1/10W 6.8K	1	
R4780	ERJ6GEYF472	M.RESISTOR CH 1/10W 4.7K	1	
R4781-84	ERJ6RBD472	M.RESISTOR CH 1/10W 4.7K	4	
R4785	ERJ6GEYG105	M.RESISTOR CH 1/10W 1M	1	
R4786	ERJ6GEYJ100	M.RESISTOR CH 1/10W 10	1	
R4787	ERJ6GEYG105	M.RESISTOR CH 1/10W 1M	1	
R4788-90	ERJ6RBD153	M.RESISTOR CH 1/10W 15K	3	
R4791	ERJ6RED150	M.RESISTOR CH 1/10W 15	1	
R4793	ERJ6GEYJ100	M.RESISTOR CH 1/10W 10	1	
R4794	ERJ6RBD153	M.RESISTOR CH 1/10W 15K	1	
R4795	ERJ6GEYG562	M.RESISTOR CH 1/10W 5.6K	1	
R4796,97	ERJ14YJ100	M.RESISTOR CH 1/4W 10	2	
R4798,99	ERJ6GEYG562	M.RESISTOR CH 1/10W 5.6K	2	
R4800,01	ERJ14YJ100	M.RESISTOR CH 1/4W 10	2	
R4802	ERJ6GEYG562	M.RESISTOR CH 1/10W 5.6K	1	
R4803,04	ERJ14YJ220	M.RESISTOR CH 1/4W 22	2	
R4805,06	ERJ6GEYG103	M.RESISTOR CH 1/10W 10K	2	
R4807,08	ERJ6GEYG102	M.RESISTOR CH 1/10W 1K	2	
R4809,10	ERJ6GEYF561	M.RESISTOR CH 1/10W 560	2	
R4811,12	ERJ6GEYG103	M.RESISTOR CH 1/10W 10K	2	
R4813	ERJ6GEY0R00	M.RESISTOR CH 1/10W 0	1	
R4814	ERJ6RBD301	M.RESISTOR CH 1/10W 300	1	
R4815	ERJ6RBD512	M.RESISTOR CH 1/10W 5.1K	1	
R4816	ERJ6RBD472	M.RESISTOR CH 1/10W 4.7K	1	
R4831	ERJ6RBD102	M.RESISTOR CH 1/10W 1K	1	
R4832	ERJ6GEYG392	M.RESISTOR CH 1/10W 3.9K	1	
R4833	ERJ6RED220	M.RESISTOR CH 1/10W 22	1	
R4834	ERJ6GEYG103	M.RESISTOR CH 1/10W 10K	1	
R4835	ERJ6RBD272	M.RESISTOR CH 1/10W 2.7K	1	
R4836	ERJ6RBD301	M.RESISTOR CH 1/10W 300	1	
R4837-39	ERJ6GEY0R00	M.RESISTOR CH 1/10W 0	3	
R4840	ERJ6RBD472	M.RESISTOR CH 1/10W 4.7K	1	
R4841	ERJ6RBD123	M.RESISTOR CH 1/10W 12K	1	
R4842	ERJ6RBD102	M.RESISTOR CH 1/10W 1K	1	
R4843	ERJ6RBD103	M.RESISTOR CH 1/10W 10K	1	
R4844	ERJ6GEYG563	M.RESISTOR CH 1/10W 56K	1	
R4845	ERJ6GEYF472	M.RESISTOR CH 1/10W 4.7K	1	
R4846	ERJ6RBD682	M.RESISTOR CH 1/10W 6.8K	1	
R4847-50	ERJ6RBD472	M.RESISTOR CH 1/10W 4.7K	4	
R4851,52	ERJ6GEYG105	M.RESISTOR CH 1/10W 1M	2	
R4853	ERJ6GEYJ100	M.RESISTOR CH 1/10W 10	1	

Ref.No.	Part No.	Part Name & Description	Pcs	Remarks
R4854-56	ERJ6RBD153	M.RESISTOR CH 1/10W 15K	3	
R4857	ERJ6RED150	M.RESISTOR CH 1/10W 15	1	
R4859	ERJ6GEYJ100	M.RESISTOR CH 1/10W 10	1	
R4860	ERJ6RBD153	M.RESISTOR CH 1/10W 15K	1	
R4861	ERJ6GEYG562	M.RESISTOR CH 1/10W 5.6K	1	
R4862,63	ERJ14YJ100	M.RESISTOR CH 1/4W 10	2	
R4864,65	ERJ6GEYG562	M.RESISTOR CH 1/10W 5.6K	2	
R4866,67	ERJ14YJ100	M.RESISTOR CH 1/4W 10	2	
R4868	ERJ6GEYG562	M.RESISTOR CH 1/10W 5.6K	1	
R4869,70	ERJ14YJ220	M.RESISTOR CH 1/4W 22	2	
R4871,72	ERJ6GEYG103	M.RESISTOR CH 1/10W 10K	2	
R4873,74	ERJ6GEYG102	M.RESISTOR CH 1/10W 1K	2	
R4875,76	ERJ6GEYF561	M.RESISTOR CH 1/10W 560	2	
R4877,78	ERJ6GEYG103	M.RESISTOR CH 1/10W 10K	2	
R4879	ERJ6GEY0R00	M.RESISTOR CH 1/10W 0	1	
R4880	ERJ6RBD301	M.RESISTOR CH 1/10W 300	1	
R4881	ERJ6RBD512	M.RESISTOR CH 1/10W 5.1K	1	
R4882	ERJ6RBD472	M.RESISTOR CH 1/10W 4.7K	1	
R4901,02	ERJ6GEYG102	M.RESISTOR CH 1/10W 1K	2	
R4903,04	ERJ6GEYF472	M.RESISTOR CH 1/10W 4.7K	2	
R4905	ERJ6GEYG103	M.RESISTOR CH 1/10W 10K	1	
R4906	ERJ14YJ330	M.RESISTOR CH 1/4W 33	1	
R4908	ERJ14YJ330	M.RESISTOR CH 1/4W 33	1	
R4910	ERJ6GEYG103	M.RESISTOR CH 1/10W 10K	1	
R4911,12	ERJ6GEYG102	M.RESISTOR CH 1/10W 1K	2	
R4914	ERJ6GEY0R00	M.RESISTOR CH 1/10W 0	1	
R4916	ERJ6GEY0R00	M.RESISTOR CH 1/10W 0	1	
R4921	ERJ6RBD682	M.RESISTOR CH 1/10W 6.8K	1	
R4922	ERJ6RBD392	M.RESISTOR CH 1/10W 3.9K	1	
R4923	ERJ6RBD561	M.RESISTOR CH 1/10W 560	1	
R4924	ERJ6GEYG105	M.RESISTOR CH 1/10W 1M	1	
R4925	ERJ6RBD682	M.RESISTOR CH 1/10W 6.8K	1	
R4926	ERJ6RBD392	M.RESISTOR CH 1/10W 3.9K	1	
R4927	ERJ6RBD561	M.RESISTOR CH 1/10W 560	1	
R4928	ERJ6GEYG105	M.RESISTOR CH 1/10W 1M	1	
R4929-31	ERJ6GEYG103	M.RESISTOR CH 1/10W 10K	3	
R4932,33	ERJ6GEY0R00	M.RESISTOR CH 1/10W 0	2	
R4934-42	ERJ6GEYG103	M.RESISTOR CH 1/10W 10K	9	
R4943-46	ERJ6GEYG104	M.RESISTOR CH 1/10W 100K	4	
R4948-50	ERJ6GEYG104	M.RESISTOR CH 1/10W 100K	3	
R4951,52	ERJ6GEYG103	M.RESISTOR CH 1/10W 10K	2	
R4957	ERJ6GEY0R00	M.RESISTOR CH 1/10W 0	1	
SW4001	VSS0126	SWITCH	1	
SW4041	VSS0126	SWITCH	1	
TG4202	VJR0646	TEST POINT	1	
TG4301	VJR0646	TEST POINT	1	
TP4201-03	VJR0646	TEST POINT	3	
TP4253	VJR0646	TEST POINT	1	
TP4301,02	VJR0646	TEST POINT	2	
TP4401	VJR0646	TEST POINT	1	
TP4476	VJR0646	TEST POINT	1	
TP4701-04	VJR0646	TEST POINT	4	
VR4001	VRV0109B101	V.RESISTOR 100	1	
VR4002	VRV0112B103	V.RESISTOR 10K	1	
VR4041	VRV0109B101	V.RESISTOR 100	1	
VR4042	VRV0112B103	V.RESISTOR 10K	1	
VR4401	VRV0112B103	V.RESISTOR 10K	1	
VR4402	VRV0109B501	V.RESISTOR 500	1	
VR4476	VRV0112B103	V.RESISTOR 10K	1	
VR4477	VRV0109B501	V.RESISTOR 500	1	
VR4701,02	VRV0112B103	V.RESISTOR 10K	2	
VR4751	VRV0109B501	V.RESISTOR 500	1	
VR4831	VRV0109B501	V.RESISTOR 500	1	
		MISCELLANEOUS		
	VML2143	CARD PULLER	1	
	VML2144	CARD PULLER	1	

Ref.No.	Part No.	Part Name & Description	Pcs	Remarks
■E9	VEP84302C	H2 CUE P.C.BOARD	1	(RTL)
C4001	ECUM1H222KBN		1	
C4002	VCC0030	C.CAPACITOR	1	
C4003	ECEV1EN4R7Q	E.CAPACITOR CH 25V 4.7U	1	
C4004	ECUM1H822KBN	C.CAPACITOR CH 50V 8200P	1	
C4005,06	ECUM1H272KBN	C.CAPACITOR CH 50V 2700P	2	
C4007	ECUX1H273KBN	C.CAPACITOR CH 50V 0.027U	1	
C4008	ECEV1CV100Q	E.CAPACITOR CH 16V 10U	1	
C4009	ECEV1CV220Q	E.CAPACITOR CH 16V 22U	1	
C4010	ECUM1E104ZFN	C.CAPACITOR CH 25V 0.1U	1	
C4011	ECEV1CV100Q	E.CAPACITOR CH 16V 10U	1	
C4012	ECEV0JV101Q	E.CAPACITOR CH6.3V 100U	1	
C4013	ECST1VY684Z	T.CAPACITOR CH 35V 0.68U	1	
C4014,15	ECEV1CV100Q	E.CAPACITOR CH 16V 10U	2	
C4016	ECUM1H151JCN	C.CAPACITOR CH 50V 150P	1	
C4017	ECUM1H103KBN	C.CAPACITOR CH 50V 0.01U	1	
C4018	ECEV1CV470Q	E.CAPACITOR CH 16V 47U	1	
C4019	ECUM1H390JCN	C.CAPACITOR CH 50V 39P	1	
C4020	ECUX1E473KBN	C.CAPACITOR CH 25V 0.047U	1	
C4021	ECEV1CV220Q	E.CAPACITOR CH 16V 22U	1	
C4022	ECUX1C394KBM	C.CAPACITOR CH 16V 0.39U	1	
C4023	ECEV1CV220Q	E.CAPACITOR CH 16V 22U	1	
C4024,25	ECUX1C394KBM	C.CAPACITOR CH 16V 0.39U	2	
C4026-28	ECHU1C104JB	P.CAPACITOR 16V 0.1U	3	
C4029	ECUX1H333KBN	C.CAPACITOR CH 50V 0.033U	1	
C4030	ECUX1E104KBN	C.CAPACITOR CH 25V 0.1U	1	
C4031	ECEV1CV220Q	E.CAPACITOR CH 16V 22U	1	
C4032,33	ECUM1E104ZFN	C.CAPACITOR CH 25V 0.1U	2	
C4034	ECEV1CV470Q	E.CAPACITOR CH 16V 47U	1	
C4035	ECUM1H222KBN	C.CAPACITOR CH 50V 2200P	1	
C4036	ECUM1H102KBN	C.CAPACITOR CH 50V 1000P	1	
C4037	ECEV1EN4R7Q	E.CAPACITOR CH 25V 4.7U	1	
C4038	ECEV1CV220Q	E.CAPACITOR CH 16V 22U	1	
C4039,40	ECUM1E104ZFN	C.CAPACITOR CH 25V 0.1U	2	
C4041	ECEV1CV470Q	E.CAPACITOR CH 16V 47U	1	
C4042	ECEV1EN4R7Q	E.CAPACITOR CH 25V 4.7U	1	
C4043	ECUM1H822KBN	C.CAPACITOR CH 50V 8200P	1	
C4044	ECUM1H103KBN	C.CAPACITOR CH 50V 0.01U	1	
C4045	ECUM1H182KBN	C.CAPACITOR CH 50V 1800P	1	
C4046	ECUM1H103KBN	C.CAPACITOR CH 50V 0.01U	1	
C4047	ECUX1C224KBM	C.CAPACITOR CH 16V 0.22U	1	
C4048	ECUM1H102KBN	C.CAPACITOR CH 50V 1000P	1	
C4049	ECUX1C105KBM	C.CAPACITOR CH 16V 1U	1	
C4050	ECHU1C104JB	P.CAPACITOR 16V 0.1U	1	
C4052	ECUM1H471JCN	C.CAPACITOR CH 50V 470P	1	
C4054	ECUM1H103KBN	C.CAPACITOR CH 50V 0.01U	1	
C4056	ECUM1H103KBN	C.CAPACITOR CH 50V 0.01U	1	
C4101,02	ECUM1E104ZFN	C.CAPACITOR CH 25V 0.1U	2	
C4103,04	ECUM1H820JCN	C.CAPACITOR CH 50V 82P	2	
C4105-07	ECEV1EN4R7Q	E.CAPACITOR CH 25V 4.7U	3	
C4108	ECEV0JV220Q	E.CAPACITOR CH6.3V 22U	1	
C4109	ECEV1CV100Q	E.CAPACITOR CH 16V 10U	1	
C4110	ECUM1H151JCN	C.CAPACITOR CH 50V 150P	1	
C4111,12	ECUX1C105KBM	C.CAPACITOR CH 16V 1U	2	
C4113,14	ECUM1H151JCN	C.CAPACITOR CH 50V 150P	2	
C4115,16	ECUX1C105KBM	C.CAPACITOR CH 16V 1U	2	
C4117	ECUM1H151JCN	C.CAPACITOR CH 50V 150P	1	
C4118	ECEV0JV220Q	E.CAPACITOR CH6.3V 22U	1	
C4119	ECEV1CV100Q	E.CAPACITOR CH 16V 10U	1	
C4120,21	ECUM1E104ZFN	C.CAPACITOR CH 25V 0.1U	2	
C4122	ECEV0JV220Q	E.CAPACITOR CH6.3V 22U	1	
C4123-25	ECUM1E104ZFN	C.CAPACITOR CH 25V 0.1U	3	
C4126	ECUM1H222KBN	C.CAPACITOR CH 50V 2200P	1	
C4127,28	ECEV0JV220Q	E.CAPACITOR CH6.3V 22U	2	
C4129	ECUM1E104ZFN	C.CAPACITOR CH 25V 0.1U	1	
C4130	ECEV0JV220Q	E.CAPACITOR CH6.3V 22U	1	
C4134,35	ECEA1HGE330	E.CAPACITOR 50V 33U	2	
C4136,37	ECUM1H030CCN	C.CAPACITOR CH 50V 3P	2	
C4138	ECEV1EN4R7Q	E.CAPACITOR CH 25V 4.7U	1	
C4139	ECEV1CV220Q	E.CAPACITOR CH 16V 22U	1	
C4140,41	ECUM1E104ZFN	C.CAPACITOR CH 25V 0.1U	2	
C4142	ECEV1CV220Q	E.CAPACITOR CH 16V 22U	1	
C4143-46	ECUM1E104ZFN	C.CAPACITOR CH 25V 0.1U	4	
C4147,48	ECUX1C105KBM	C.CAPACITOR CH 16V 1U	2	

Ref.No.	Part No.	Part Name & Description	Pcs	Remarks
C4201,02	ECUM1E104ZFN	C.CAPACITOR CH 25V 0.1U	2	
C4203	ECUM1H470JCN	C.CAPACITOR CH 50V 47P	1	
C4204,05	ECEV1CV100Q	E.CAPACITOR CH 16V 10U	2	
C4206	ECUM1H103KBN	C.CAPACITOR CH 50V 0.01U	1	
C4207	ECUM1H470JCN	C.CAPACITOR CH 50V 47P	1	
C4208	ECUM1H103KBN	C.CAPACITOR CH 50V 0.01U	1	
C4209,10	ECEV1CV100Q	E.CAPACITOR CH 16V 10U	2	
C4211	ECEV1CV220Q	E.CAPACITOR CH 16V 22U	1	
C4212	ECUM1E104ZFN	C.CAPACITOR CH 25V 0.1U	1	
C4213	ECEV1CV220Q	E.CAPACITOR CH 16V 22U	1	
C4214	ECUM1E104ZFN	C.CAPACITOR CH 25V 0.1U	1	
C4215	ECEV1CV470Q	E.CAPACITOR CH 16V 47U	1	
C4216,17	ECEA1CGE101	E.CAPACITOR 16V 100U	2	
C4218	ECEV1CV220Q	E.CAPACITOR CH 16V 22U	1	
C4219	ECUM1E104ZFN	C.CAPACITOR CH 25V 0.1U	1	
C4220	ECEV1CV220Q	E.CAPACITOR CH 16V 22U	1	
C4221	ECUM1E104ZFN	C.CAPACITOR CH 25V 0.1U	1	
C4222	ECEV1CV470Q	E.CAPACITOR CH 16V 47U	1	
C4223-25	ECUM1E104ZFN	C.CAPACITOR CH 25V 0.1U	3	
C4226	ECEV1CV100Q	E.CAPACITOR CH 16V 10U	1	
C4227,28	ECUX1C474KBM	C.CAPACITOR CH 16V 0.47U	2	
C4229,30	ECUM1H472KBN	C.CAPACITOR CH 50V 4700P	2	
C4231	ECUM1H103KBN	C.CAPACITOR CH 50V 0.01U	1	
C4232	ECEV1CV100Q	E.CAPACITOR CH 16V 10U	1	
C4233	ECHU1H223JB	P.CAPACITOR 50V 0.022U	1	
C4234	ECEV1HV4R7Q	E.CAPACITOR CH 50V 4.7U	1	
C4235	VCF2JAB681J	C.CAPACITOR 630V 680P	1	
C4236	ECUX1C474KBM	C.CAPACITOR CH 16V 0.47U	1	
C4237	ECUM1H103KBN	C.CAPACITOR CH 50V 0.01U	1	
C4238	ECUX1C474KBM	C.CAPACITOR CH 16V 0.47U	1	
C4239	ECUM1E104ZFN	C.CAPACITOR CH 25V 0.1U	1	
C4240	ECEV1CV220Q	E.CAPACITOR CH 16V 22U	1	
C4241	ECUM1E104ZFN	C.CAPACITOR CH 25V 0.1U	1	
C4242	VCF2GAB682J	C.CAPACITOR 400V 6800P	1	
C4243	ECUM1H103KBN	C.CAPACITOR CH 50V 0.01U	1	
C4244	ECEV1CV220Q	E.CAPACITOR CH 16V 22U	1	
C4245	VCF2GAB682J	C.CAPACITOR 400V 6800P	1	
C4246,47	ECUM1H471JCN	C.CAPACITOR CH 50V 470P	2	
C4303-06	ECUM1H103KBN	C.CAPACITOR CH 50V 0.01U	4	
C4307,08	ECUM1H103ZFN	C.CAPACITOR CH 50V 0.01U	2	
C4401	ECEV1CV220Q	E.CAPACITOR CH 16V 22U	1	
C4402	ECUM1E104ZFN	C.CAPACITOR CH 25V 0.1U	1	
C4403	ECEV0JV101Q	E.CAPACITOR CH6.3V 100U	1	
C4404-06	ECUM1E104ZFN	C.CAPACITOR CH 25V 0.1U	3	
C4407	ECEV1CV220Q	E.CAPACITOR CH 16V 22U	1	
C4408	ECUM1E104ZFN	C.CAPACITOR CH 25V 0.1U	1	
C4409	ECEV1CV100Q	E.CAPACITOR CH 16V 10U	1	
C4410-13	ECUM1E104ZFN	C.CAPACITOR CH 25V 0.1U	4	
C4414	ECUM1H103KBN	C.CAPACITOR CH 50V 0.01U	1	
C4415	ECEV0JV101Q	E.CAPACITOR CH6.3V 100U	1	
C4416	ECUM1E104ZFN	C.CAPACITOR CH 25V 0.1U	1	
C4417	ECUM1H103KBN	C.CAPACITOR CH 50V 0.01U	1	
C4418	ECEV1CN100Q	E.CAPACITOR CH 16V 10U	1	
C4501-03	ECUM1E104ZFN	C.CAPACITOR CH 25V 0.1U	3	
C4504,05	ECUM1H103KBN	C.CAPACITOR CH 50V 0.01U	2	
D4101	MA152A	DIODE	1	
D4102-04	MA157	DIODE	3	
D4201,02	MA157	DIODE	2	
D4203-05	MA152A	DIODE	3	
FL4001	EIR7QF012B	TRANSFORMER	1	
FL4002	VLF1069	FILTER	1	
FL4201,02	VLF0941C223	FILTER	2	
IC4001	NJM4580ED	IC	1	
IC4002	MC14053BF	IC	1	
IC4003	CXA1102M	IC	1	
IC4004,05	NJM4580ED	IC	2	
IC4006	MC14052BF	IC	1	
IC4008	NJM4580ED	IC	1	
IC4009	AN78N09	IC	1	
IC4010	AN79N09	IC	1	
IC4011,12	NJM4580ED	IC	2	
IC4013	MC14053BF	IC	1	

Ref.No.	Part No.	Part Name & Description	Pcs	Remarks
IC4014	NJM4580ED	IC	1	
IC4015	MC14053BDT	IC	1	
IC4101,02	AD7945BR	IC	2	
IC4103-05	NJM4580ED	IC	3	
IC4106	MC14053BF	IC	1	
IC4107	NJM4580ED	IC	1	
IC4108	XC62AP3002P	IC	1	
IC4109	AK4503VF	IC	1	
IC4110	T74VHCT244F	IC	1	
IC4111	T74VHC244F	IC	1	
IC4112	NJM4580ED	IC	1	
IC4113	MC14052BF	IC	1	
IC4114	NJM4580ED	IC	1	
IC4115	NJM78L05UA	IC	1	
IC4116	NJM79L05UA	IC	1	
IC4117	MC14053BF	IC	1	
IC4201	MC14052BF	IC	1	
IC4202	NJM4580ED	IC	1	
IC4203	NJM2043MD	IC	1	
IC4204,05	AQV212SX	IC	2	
IC4206	AN78N09	IC	1	
IC4207	TC4W53F	IC	1	
IC4301,02	SN74S1051NS	IC	2	
IC4303	74F245SJ	IC	1	
IC4304	74F541SJ	IC	1	
IC4305	74AC139SJ	IC	1	
IC4306	TC7SU04F	IC	1	
IC4307,08	UPD71055GB	IC	2	
IC4401	TC4W53F	IC	1	
IC4402	MC74HC74AF	IC	1	
IC4403	MC74HC541AF	IC	1	
IC4404	MB621926	IC	1	
IC4405	MB81480070	IC	1	
IC4406	NJM78L05UA	IC	1	
IC4407	AK4320VM	IC	1	
IC4408	TC4W53F	IC	1	
IC4501	MB621926	IC	1	
IC4502,03	MC74HC164AF	IC	2	
IC4504	TC7SU04F	IC	1	
IC4505	TC7W74F	IC	1	
IC4506	TC4W53F	IC	1	
IC4507	MB81480070	IC	1	
L4001	VLQ0423J472	COIL 4700UH	1	
P4001	VJP3454B096	CONNECTOR (MALE)	1	
P4002	VJP1230T	CONNECTOR (MALE) 3P	1	
P4003	VJP1233T	CONNECTOR (MALE) 6P	1	
Q4001,02	2SD1149-R	TRANSISTOR	2	
Q4003	2SB792-R	TRANSISTOR	1	
Q4004,05	2SD602A-R	TRANSISTOR	2	
Q4006	2SB710A-R	TRANSISTOR	1	
Q4101-03	2SD1328	TRANSISTOR	3	
Q4201	2SD1994A-R	TRANSISTOR	1	
Q4202	2SB1322A-R	TRANSISTOR	1	
Q4203	2SD1994A-R	TRANSISTOR	1	
Q4204	2SB1322A-R	TRANSISTOR	1	
Q4205	2SD602A-R	TRANSISTOR	1	
Q4206,07	2SB710A-R	TRANSISTOR	2	
Q4208	2SD602A-R	TRANSISTOR	1	
Q4209	2SB710A-R	TRANSISTOR	1	
Q4210-12	2SD602A-R	TRANSISTOR	3	
Q4213	2SB710A-R	TRANSISTOR	1	
Q4214	2SD602A-R	TRANSISTOR	1	
Q4215	2SB710A-R	TRANSISTOR	1	
Q4216-19	2SD602A-R	TRANSISTOR	4	
QR4001,02	UN2213	TRANSISTOR-RESISTOR	2	
QR4201	UN2213	TRANSISTOR-RESISTOR	1	
R4001	ERJ6GEYF822	M.RESISTOR CH 1/10W 8.2K	1	
R4002	ERJ6GEYG103	M.RESISTOR CH 1/10W 10K	1	
R4003,04	ERJ6GEYF472	M.RESISTOR CH 1/10W 4.7K	2	
R4005	ERJ6GEYG221	M.RESISTOR CH 1/10W 220	1	

Ref.No.	Part No.	Part Name & Description	Pcs	Remarks
R4006	ERJ6GEYF472	M.RESISTOR CH 1/10W 4.7K	1	
R4007	ERJ6GEYG103	M.RESISTOR CH 1/10W 10K	1	
R4008	ERJ6GEYG821	M.RESISTOR CH 1/10W 820	1	
R4009,10	ERJ6GEYG392	M.RESISTOR CH 1/10W 3.9K	2	
R4011	ERJ6GEYF822	M.RESISTOR CH 1/10W 8.2K	1	
R4012	ERJ6GEYG182	M.RESISTOR CH 1/10W 1.8K	1	
R4013	ERJ6RBD433	M.RESISTOR CH 1/10W 43K	1	
R4014,15	ERJ6GEYG103	M.RESISTOR CH 1/10W 10K	2	
R4016	ERJ6GEYJ100	M.RESISTOR CH 1/10W 10	1	
R4017	ERJ6GEYF472	M.RESISTOR CH 1/10W 4.7K	1	
R4018	ERJ6GEYF561	M.RESISTOR CH 1/10W 560	1	
R4019	ERJ6GEYF472	M.RESISTOR CH 1/10W 4.7K	1	
R4020	ERJ6GEYG223	M.RESISTOR CH 1/10W 22K	1	
R4021	ERJ6GEYF472	M.RESISTOR CH 1/10W 4.7K	1	
R4022	ERJ6GEYG103	M.RESISTOR CH 1/10W 10K	1	
R4023,24	ERJ6GEYF472	M.RESISTOR CH 1/10W 4.7K	2	
R4025	ERJ6GEYF473	M.RESISTOR CH 1/10W 47K	1	
R4026	ERJ6GEYG470	M.RESISTOR CH 1/10W 47	1	
R4027	ERJ6GEYG102	M.RESISTOR CH 1/10W 1K	1	
R4028	ERJ6GEYF124	M.RESISTOR CH 1/10W 120K	1	
R4029	ERJ6GEYG222	M.RESISTOR CH 1/10W 2.2K	1	
R4030	ERJ6GEYF393	M.RESISTOR CH 1/10W 39K	1	
R4031	ERJ6GEYF333	M.RESISTOR CH 1/10W 33K	1	
R4032	ERJ6GEYF472	M.RESISTOR CH 1/10W 4.7K	1	
R4033,34	ERJ6GEYG101	M.RESISTOR CH 1/10W 100	2	
R4035	ERJ6RBD152	M.RESISTOR CH 1/10W 1.5K	1	
R4036	ERJ6RBD392	M.RESISTOR CH 1/10W 3.9K	1	
R4037	ERJ6GEY0R00	M.RESISTOR CH 1/10W 0	1	
R4038	ERJ6GEYG101	M.RESISTOR CH 1/10W 100	1	
R4039,40	ERJ6RBD122	M.RESISTOR CH 1/10W 1.2K	2	
R4041	ERJ6RBD823	M.RESISTOR CH 1/10W 82K	1	
R4044	ERJ6GEYG101	M.RESISTOR CH 1/10W 100	1	
R4045	ERJ6GEY0R00	M.RESISTOR CH 1/10W 0	1	
R4046	ERJ6GEYG223	M.RESISTOR CH 1/10W 22K	1	
R4047,48	ERJ6GEYG103	M.RESISTOR CH 1/10W 10K	2	
R4049	ERJ6GEY0R00	M.RESISTOR CH 1/10W 0	1	
R4051	ERJ6GEYG103	M.RESISTOR CH 1/10W 10K	1	
R4052	ERJ6RBD202	M.RESISTOR CH 1/10W 2K	1	
R4053	ERJ6GEYG562	M.RESISTOR CH 1/10W 5.6K	1	
R4054	ERJ6GEYG332	M.RESISTOR CH 1/10W 3.3K	1	
R4055	ERJ6GEYG222	M.RESISTOR CH 1/10W 2.2K	1	
R4056	ERJ6GEYG103	M.RESISTOR CH 1/10W 10K	1	
R4057	ERJ6GEYG222	M.RESISTOR CH 1/10W 2.2K	1	
R4058,59	ERJ6GEYG223	M.RESISTOR CH 1/10W 22K	2	
R4060,61	ERJ6GEYF473	M.RESISTOR CH 1/10W 47K	2	
R4064-66	ERJ6GEYG103	M.RESISTOR CH 1/10W 10K	3	
R4068,69	ERJ6GEY0R00	M.RESISTOR CH 1/10W 0	2	
R4071	ERJ6GEYG104	M.RESISTOR CH 1/10W 100K	1	
R4072	ERJ6GEYG103	M.RESISTOR CH 1/10W 10K	1	
R4073	ERJ6GEY0R00	M.RESISTOR CH 1/10W 0	1	
R4075	ERJ6GEYG103	M.RESISTOR CH 1/10W 10K	1	
R4076	ERJ6GEYG102	M.RESISTOR CH 1/10W 1K	1	
R4078	ERJ6GEYF393	M.RESISTOR CH 1/10W 39K	1	
R4079	ERJ6GEY0R00	M.RESISTOR CH 1/10W 0	1	
R4081	ERJ6GEYG103	M.RESISTOR CH 1/10W 10K	1	
R4082	ERJ6GEYF393	M.RESISTOR CH 1/10W 39K	1	
R4083	ERJ6GEYG103	M.RESISTOR CH 1/10W 10K	1	
R4085	ERJ6GEY0R00	M.RESISTOR CH 1/10W 0	1	
R4090	ERJ6GEY0R00	M.RESISTOR CH 1/10W 0	1	
R4092	ERJ6GEYG104	M.RESISTOR CH 1/10W 100K	1	
R4094	ERJ6GEY0R00	M.RESISTOR CH 1/10W 0	1	
R4096	ERJ6GEYG103	M.RESISTOR CH 1/10W 10K	1	
R4101	ERJ6RBD123	M.RESISTOR CH 1/10W 12K	1	
R4102	ERJ6RBD103	M.RESISTOR CH 1/10W 10K	1	
R4103	ERJ6GEYG103	M.RESISTOR CH 1/10W 10K	1	
R4104	ERJ6RED124	M.RESISTOR CH 1/10W 120K	1	
R4105	ERJ6RBD273	M.RESISTOR CH 1/10W 27K	1	
R4106	ERJ6RBD682	M.RESISTOR CH 1/10W 6.8K	1	
R4107	ERJ6RBD123	M.RESISTOR CH 1/10W 12K	1	
R4108	ERJ6RBD822	M.RESISTOR CH 1/10W 8.2K	1	
R4109	ERJ6GEYG470	M.RESISTOR CH 1/10W 47	1	
R4110	ERJ6GEYG103	M.RESISTOR CH 1/10W 10K	1	
R4111	ERJ6GEYG222	M.RESISTOR CH 1/10W 2.2K	1	
R4112	ERJ6RBD912	M.RESISTOR CH 1/10W 9.1K	1	
R4113	ERJ6GEYG103	M.RESISTOR CH 1/10W 10K	1	

Ref.No.	Part No.	Part Name & Description	Pcs	Remarks
R4114	ERJ6GEYF473	M.RESISTOR CH 1/10W 47K	1	
R4115	ERJ6GEYG101	M.RESISTOR CH 1/10W 100	1	
R4116	ERJ6GEYG104	M.RESISTOR CH 1/10W 100K	1	
R4117	ERJ6GEYG103	M.RESISTOR CH 1/10W 10K	1	
R4118	ERJ6RBD102	M.RESISTOR CH 1/10W 1K	1	
R4119	ERJ6RBD153	M.RESISTOR CH 1/10W 15K	1	
R4121	ERJ6GEY0R00	M.RESISTOR CH 1/10W 0	1	
R4122-29	ERJ6RBD103	M.RESISTOR CH 1/10W 10K	8	
R4131,32	ERJ6GEYJ100	M.RESISTOR CH 1/10W 10	2	
R4134	ERJ6GEYF472	M.RESISTOR CH 1/10W 4.7K	1	
R4135	ERJ6GEY0R00	M.RESISTOR CH 1/10W 0	1	
R4136	ERJ6GEYG471	M.RESISTOR CH 1/10W 470	1	
R4137,38	ERJ6GEYG103	M.RESISTOR CH 1/10W 10K	2	
R4139,40	ERJ6GEYF472	M.RESISTOR CH 1/10W 4.7K	2	
R4142	ERJ6GEY0R00	M.RESISTOR CH 1/10W 0	1	
R4143	ERJ12YJ621	M.RESISTOR CH 1/2W 620	1	
R4144	ERJ6RBD223	M.RESISTOR CH 1/10W 22K	1	
R4145	ERJ6RBD123	M.RESISTOR CH 1/10W 12K	1	
R4146,47	ERJ6RBD473	M.RESISTOR CH 1/10W 47K	2	
R4148	ERJ6RBD123	M.RESISTOR CH 1/10W 12K	1	
R4149	ERJ6RBD333	M.RESISTOR CH 1/10W 33K	1	
R4150	ERJ6RBD332	M.RESISTOR CH 1/10W 3.3K	1	
R4151	ERJ6RHD2101	M.RESISTOR CH 1/10W 2.1K	1	
R4152	ERJ6GEYJ335	M.RESISTOR CH 1/10W 3.3M	1	
R4153	ERJ6RBD333	M.RESISTOR CH 1/10W 33K	1	
R4154	ERJ6RBD332	M.RESISTOR CH 1/10W 3.3K	1	
R4155	ERJ6RHD2101	M.RESISTOR CH 1/10W 2.1K	1	
R4156	ERJ6GEYJ335	M.RESISTOR CH 1/10W 3.3M	1	
R4157,58	ERJ6RBD472	M.RESISTOR CH 1/10W 4.7K	2	
R4159	ERJ6RED470	M.RESISTOR CH 1/10W 47	1	
R4160,61	ERJ6RBD472	M.RESISTOR CH 1/10W 4.7K	2	
R4162	ERJ6RED470	M.RESISTOR CH 1/10W 47	1	
R4163	ERJ6RBD152	M.RESISTOR CH 1/10W 1.5K	1	
R4164	ERJ6RBD102	M.RESISTOR CH 1/10W 1K	1	
R4165	ERJ6GEYG103	M.RESISTOR CH 1/10W 10K	1	
R4166	ERJ6RBD472	M.RESISTOR CH 1/10W 4.7K	1	
R4169	ERJ6GEYG563	M.RESISTOR CH 1/10W 56K	1	
R4170	ERJ6RBD102	M.RESISTOR CH 1/10W 1K	1	
R4171	ERJ6RBD151	M.RESISTOR CH 1/10W 150	1	
R4172	ERJ6RBD152	M.RESISTOR CH 1/10W 1.5K	1	
R4173	ERJ6RBD471	M.RESISTOR CH 1/10W 470	1	
R4174	ERJ6RBD103	M.RESISTOR CH 1/10W 10K	1	
R4175	ERJ6RBD222	M.RESISTOR CH 1/10W 2.2K	1	
R4176	ERJ6RBD561	M.RESISTOR CH 1/10W 560	1	
R4177	ERJ6RBD103	M.RESISTOR CH 1/10W 10K	1	
R4178	ERJ6RBD222	M.RESISTOR CH 1/10W 2.2K	1	
R4179	ERJ6RBD561	M.RESISTOR CH 1/10W 560	1	
R4201	ERJ6RBD301	M.RESISTOR CH 1/10W 300	1	
R4202	ERJ6RBD472	M.RESISTOR CH 1/10W 4.7K	1	
R4203	ERJ6RBD272	M.RESISTOR CH 1/10W 2.7K	1	
R4204	ERJ6RBD123	M.RESISTOR CH 1/10W 12K	1	
R4205	ERJ6RBD472	M.RESISTOR CH 1/10W 4.7K	1	
R4206	ERJ6RBD102	M.RESISTOR CH 1/10W 1K	1	
R4207	ERJ6RBD103	M.RESISTOR CH 1/10W 10K	1	
R4208	ERJ6GEYG563	M.RESISTOR CH 1/10W 56K	1	
R4209	ERJ6RBD472	M.RESISTOR CH 1/10W 4.7K	1	
R4210	ERJ6RBD271	M.RESISTOR CH 1/10W 270	1	
R4211	ERJ6RBD153	M.RESISTOR CH 1/10W 15K	1	
R4212	ERJ6RBD472	M.RESISTOR CH 1/10W 4.7K	1	
R4213	ERJ6GEYG105	M.RESISTOR CH 1/10W 1M	1	
R4214,15	ERJ6RBD153	M.RESISTOR CH 1/10W 15K	2	
R4216	ERJ6RBD472	M.RESISTOR CH 1/10W 4.7K	1	
R4217	ERJ6RBD153	M.RESISTOR CH 1/10W 15K	1	
R4218,19	ERJ6RBD472	M.RESISTOR CH 1/10W 4.7K	2	
R4220	ERJ6GEYG105	M.RESISTOR CH 1/10W 1M	1	
R4221	ERJ6RBD153	M.RESISTOR CH 1/10W 15K	1	
R4222	ERJ6GEYJ100	M.RESISTOR CH 1/10W 10	1	
R4223,24	ERJ6GEYG562	M.RESISTOR CH 1/10W 5.6K	2	
R4225	ERJ6GEYJ100	M.RESISTOR CH 1/10W 10	1	
R4226,27	ERJ6GEYG562	M.RESISTOR CH 1/10W 5.6K	2	
R4228-31	ERJ14YJ100	M.RESISTOR CH 1/4W 10	4	
R4232,33	ERJ14YJ220	M.RESISTOR CH 1/4W 22	2	
R4234	ERJ6GEYG102	M.RESISTOR CH 1/10W 1K	1	
R4235,36	ERJ6GEYG103	M.RESISTOR CH 1/10W 10K	2	
R4237	ERJ6GEYG102	M.RESISTOR CH 1/10W 1K	1	

Ref.No.	Part No.	Part Name & Description	Pcs	Remarks
R4238,39	ERJ6GEYF561	M.RESISTOR CH 1/10W 560	2	
R4240,41	ERJ6GEYG103	M.RESISTOR CH 1/10W 10K	2	
R4242	ERJ6GEY0R00	M.RESISTOR CH 1/10W 0	1	
R4243	ERJ6GEYG103	M.RESISTOR CH 1/10W 10K	1	
R4244	ERJ6GEYG332	M.RESISTOR CH 1/10W 3.3K	1	
R4245,46	ERJ6GEYG563	M.RESISTOR CH 1/10W 56K	2	
R4247	ERJ6GEYF472	M.RESISTOR CH 1/10W 4.7K	1	
R4248	ERJ6GEYG102	M.RESISTOR CH 1/10W 1K	1	
R4249,50	ERJ6GEYG563	M.RESISTOR CH 1/10W 56K	2	
R4251	ERJ6GEYF472	M.RESISTOR CH 1/10W 4.7K	1	
R4252	ERJ6GEYF333	M.RESISTOR CH 1/10W 33K	1	
R4253	ERJ6GEYF472	M.RESISTOR CH 1/10W 4.7K	1	
R4254	ERJ6GEYG101	M.RESISTOR CH 1/10W 100	1	
R4255	ERJ6GEYG470	M.RESISTOR CH 1/10W 47	1	
R4256	ERJ6GEYF123	M.RESISTOR CH 1/10W 12K	1	
R4257	ERJ6GEYG152	M.RESISTOR CH 1/10W 1.5K	1	
R4258	ERJ6GEYG220	M.RESISTOR CH 1/10W 22	1	
R4259	ERJ6GEYG563	M.RESISTOR CH 1/10W 56K	1	
R4260	ERJ6GEYG332	M.RESISTOR CH 1/10W 3.3K	1	
R4261	ERJ6GEYF472	M.RESISTOR CH 1/10W 4.7K	1	
R4262	ERJ6GEYG563	M.RESISTOR CH 1/10W 56K	1	
R4263	ERJ6GEYG332	M.RESISTOR CH 1/10W 3.3K	1	
R4264	ERJ6GEYF472	M.RESISTOR CH 1/10W 4.7K	1	
R4265,66	ERJ6GEYG563	M.RESISTOR CH 1/10W 56K	2	
R4267,68	ERJ6GEYG471	M.RESISTOR CH 1/10W 470	2	
R4269	ERJ6GEYG180	M.RESISTOR CH 1/10W 18	1	
R4270,71	ERJ6GEYG103	M.RESISTOR CH 1/10W 10K	2	
R4272	ERJ6GEYG222	M.RESISTOR CH 1/10W 2.2K	1	
R4273	ERJ6GEYJ1R0	M.RESISTOR CH 1/10W 1	1	
R4274,75	ERJ6GEYG471	M.RESISTOR CH 1/10W 470	2	
R4276	ERJ6GEYG180	M.RESISTOR CH 1/10W 18	1	
R4277	ERJ6GEYJ1R0	M.RESISTOR CH 1/10W 1	1	
R4278	ERJ6GEYF123	M.RESISTOR CH 1/10W 12K	1	
R4279,80	ERJ6GEY0R00	M.RESISTOR CH 1/10W 0	2	
R4281	ERJ6RBD512	M.RESISTOR CH 1/10W 5.1K	1	
R4282	ERJ6RBD301	M.RESISTOR CH 1/10W 300	1	
R4283	ERJ6RBD391	M.RESISTOR CH 1/10W 390	1	
R4284	ERJ6RBD222	M.RESISTOR CH 1/10W 2.2K	1	
R4285	ERJ6RBD103	M.RESISTOR CH 1/10W 10K	1	
R4301,02	ERJ6GEY0R00	M.RESISTOR CH 1/10W 0	2	
R4303-16	ERJ6GEYG103	M.RESISTOR CH 1/10W 10K	14	
R4401	ERJ6GEY0R00	M.RESISTOR CH 1/10W 0	1	
R4402	ERJ6GEYF473	M.RESISTOR CH 1/10W 47K	1	
R4403-06	ERJ6GEYG331	M.RESISTOR CH 1/10W 330	4	
R4407	ERJ6GEYF473	M.RESISTOR CH 1/10W 47K	1	
R4408	ERJ6GEY0R00	M.RESISTOR CH 1/10W 0	1	
R4409	ERJ6GEYF473	M.RESISTOR CH 1/10W 47K	1	
R4410	ERJ6GEYJ100	M.RESISTOR CH 1/10W 10	1	
R4411-13	ERJ6GEY0R00	M.RESISTOR CH 1/10W 0	3	
R4414,15	ERJ6GEYF473	M.RESISTOR CH 1/10W 47K	2	
R4417-20	ERJ6GEY0R00	M.RESISTOR CH 1/10W 0	4	
R4421	ERJ6GEYG103	M.RESISTOR CH 1/10W 10K	1	
R4423	ERJ6GEY0R00	M.RESISTOR CH 1/10W 0	1	
R4425	ERJ6GEY0R00	M.RESISTOR CH 1/10W 0	1	
R4427	ERJ6GEY0R00	M.RESISTOR CH 1/10W 0	1	
R4430	ERJ6GEY0R00	M.RESISTOR CH 1/10W 0	1	
R4502-05	ERJ6GEYG331	M.RESISTOR CH 1/10W 330	4	
R4506-11	ERJ6GEY0R00	M.RESISTOR CH 1/10W 0	6	
R4513,14	ERJ6GEY0R00	M.RESISTOR CH 1/10W 0	2	
R4517	ERJ6GEY0R00	M.RESISTOR CH 1/10W 0	1	
R4519	ERJ6GEY0R00	M.RESISTOR CH 1/10W 0	1	
SW4001	VSS0367-04B	SWITCH	1	
SW4002	VSS0342	SWITCH	1	
SW4101	VSS0126	SWITCH	1	
T4201	VLT0866	TRANSFORMER	1	
T4202	VLT0868	TRANSFORMER	1	
T4203,04	VLT0867	TRANSFORMER	2	
TG4101	VJR0646	TEST POINT	1	
TG4201	VJR0646	TEST POINT	1	
TP4001-03	VJR0646	TEST POINT	3	
TP4101-03	VJR0646	TEST POINT	3	

Ref.No.	Part No.	Part Name & Description	Pcs	Remarks
TP4201-03	VJR0646	TEST POINT	3	
VR4001	VRV0112B103	V.RESISTOR 10K	1	
VR4002	VRV0064B503	V.RESISTOR 50K	1	
VR4003	VRV0112B502	V.RESISTOR 5K	1	
VR4005	VRV0112B203	V.RESISTOR 20K	1	
VR4006	VRV0112B103	V.RESISTOR 10K	1	
VR4202	VRV0112B104	V.RESISTOR 100K	1	
		MISCELLANEOUS		
	VML2143	CARD PULLER	1	
	VML2144	CARD PULLER	1	
■E10	VEP85048A	H3 EQ P.C.BOARD	1	(RTL)
C5001-04	ECUM1H104ZFN	C.CAPACITOR CH 50V 0.1U	4	
C5005,06	ECUX1C105ZFN	C.CAPACITOR CH 16V 1U	2	
C5008,09	ECUM1H104ZFN	C.CAPACITOR CH 50V 0.1U	2	
C5011,12	ECUM1H104ZFN	C.CAPACITOR CH 50V 0.1U	2	
C5013	ECUX1C105ZFN	C.CAPACITOR CH 16V 1U	1	
C5014,15	ECUM1H104ZFN	C.CAPACITOR CH 50V 0.1U	2	
C5016,17	ECUX1H122KBN	C.CAPACITOR CH 50V 1200P	2	
C5018,19	ECUM1H104ZFN	C.CAPACITOR CH 50V 0.1U	2	
C5020	ECUX1H102JCN	C.CAPACITOR CH 50V 1000P	1	
C5021-29	ECUM1H104ZFN	C.CAPACITOR CH 50V 0.1U	9	
C5101-04	ECUM1H104ZFN	C.CAPACITOR CH 50V 0.1U	4	
C5105	ECUX1C105ZFN	C.CAPACITOR CH 16V 1U	1	
C5107	ECUX1C105ZFN	C.CAPACITOR CH 16V 1U	1	
C5108,09	ECUM1H104ZFN	C.CAPACITOR CH 50V 0.1U	2	
C5111-16	ECUM1H104ZFN	C.CAPACITOR CH 50V 0.1U	6	
C5117	ECUX1C105ZFN	C.CAPACITOR CH 16V 1U	1	
C5118-25	ECUM1H104ZFN	C.CAPACITOR CH 50V 0.1U	8	
C5126,27	ECUX1H122KBN	C.CAPACITOR CH 50V 1200P	2	
C5128	ECUX1H102JCN	C.CAPACITOR CH 50V 1000P	1	
C5129-37	ECUM1H104ZFN	C.CAPACITOR CH 50V 0.1U	9	
C5202-11	ECUM1H104ZFN	C.CAPACITOR CH 50V 0.1U	10	
C5213-15	ECUM1H104ZFN	C.CAPACITOR CH 50V 0.1U	3	
C5217-19	ECUM1H104ZFN	C.CAPACITOR CH 50V 0.1U	3	
C5220	ECUX1C105ZFN	C.CAPACITOR CH 16V 1U	1	
C5223-30	ECUM1H104ZFN	C.CAPACITOR CH 50V 0.1U	8	
C5231	ECUM1H152KBN	C.CAPACITOR CH 50V 1500P	1	
C5232,33	ECUM1H104ZFN	C.CAPACITOR CH 50V 0.1U	2	
C5234	ECUM1H821JCN	C.CAPACITOR CH 50V 820P	1	
C5235	ECUM1H104ZFN	C.CAPACITOR CH 50V 0.1U	1	
C5236	ECUX1C104KBN	C.CAPACITOR CH 16V 0.1U	1	
C5238-40	ECUM1H104ZFN	C.CAPACITOR CH 50V 0.1U	3	
C5241	ECUM1H680JCN	C.CAPACITOR CH 50V 68P	1	
C5242-47	ECUM1H104ZFN	C.CAPACITOR CH 50V 0.1U	6	
C5249,50	ECUM1H104ZFN	C.CAPACITOR CH 50V 0.1U	2	
C5251,52	ECUM1H152KBN	C.CAPACITOR CH 50V 1500P	2	
C5253	ECUM1H104ZFN	C.CAPACITOR CH 50V 0.1U	1	
C5254	ECUM1H152KBN	C.CAPACITOR CH 50V 1500P	1	
C5256	ECUM1H152KBN	C.CAPACITOR CH 50V 1500P	1	
C5258-62	ECUM1H104ZFN	C.CAPACITOR CH 50V 0.1U	5	
C5266	ECUM1H104ZFN	C.CAPACITOR CH 50V 0.1U	1	
C5401-03	ECUM1H104ZFN	C.CAPACITOR CH 50V 0.1U	3	
C5405-11	ECUM1H104ZFN	C.CAPACITOR CH 50V 0.1U	7	
C5413-16	ECUM1H104ZFN	C.CAPACITOR CH 50V 0.1U	4	
C5418,19	ECUM1H104ZFN	C.CAPACITOR CH 50V 0.1U	2	
C5420	ECUX1C105ZFN	C.CAPACITOR CH 16V 1U	1	
C5423-32	ECUM1H104ZFN	C.CAPACITOR CH 50V 0.1U	10	
C5433	ECUM1H152KBN	C.CAPACITOR CH 50V 1500P	1	
C5434	ECUM1H104ZFN	C.CAPACITOR CH 50V 0.1U	1	
C5435	ECUM1H821JCN	C.CAPACITOR CH 50V 820P	1	
C5436	ECUM1H104ZFN	C.CAPACITOR CH 50V 0.1U	1	
C5437	ECUX1C104KBN	C.CAPACITOR CH 16V 0.1U	1	
C5438	ECUX1C105ZFN	C.CAPACITOR CH 16V 1U	1	
C5439-41	ECUM1H104ZFN	C.CAPACITOR CH 50V 0.1U	3	
C5442	ECUM1H680JCN	C.CAPACITOR CH 50V 68P	1	
C5443-52	ECUM1H104ZFN	C.CAPACITOR CH 50V 0.1U	10	
C5453,54	ECUM1H152KBN	C.CAPACITOR CH 50V 1500P	2	
C5455	ECUM1H104ZFN	C.CAPACITOR CH 50V 0.1U	1	

Ref.No.	Part No.	Part Name & Description	Pcs	Remarks
C5456,57	ECUM1H152KBN	C.CAPACITOR CH 50V 1500P	2	
C5460-64	ECUM1H104ZFN	C.CAPACITOR CH 50V 0.1U	5	
C5466	ECUM1H104ZFN	C.CAPACITOR CH 50V 0.1U	1	
C5601-04	ECUM1H104ZFN	C.CAPACITOR CH 50V 0.1U	4	
C5605	ECUX1H040CCN	C.CAPACITOR CH 50V 4P	1	
C5606-09	ECUM1H104ZFN	C.CAPACITOR CH 50V 0.1U	4	
C5611	ECUM1H104ZFN	C.CAPACITOR CH 50V 0.1U	1	
C5613,14	ECUM1H104ZFN	C.CAPACITOR CH 50V 0.1U	2	
C5619-22	ECUM1H104ZFN	C.CAPACITOR CH 50V 0.1U	4	
C5625	ECUM1H104ZFN	C.CAPACITOR CH 50V 0.1U	1	
C5627	ECUM1H104ZFN	C.CAPACITOR CH 50V 0.1U	1	
C5630	ECUM1H104ZFN	C.CAPACITOR CH 50V 0.1U	1	
C5631	ECUM1H270JCN	C.CAPACITOR CH 50V 27P	1	
C5633-36	ECUM1H104ZFN	C.CAPACITOR CH 50V 0.1U	4	
C5638	ECUM1H104ZFN	C.CAPACITOR CH 50V 0.1U	1	
C5643	ECUM1H104ZFN	C.CAPACITOR CH 50V 0.1U	1	
C5701-05	ECUM1H104ZFN	C.CAPACITOR CH 50V 0.1U	5	
C5710,11	ECUM1H104ZFN	C.CAPACITOR CH 50V 0.1U	2	
C5715,16	ECUM1H104ZFN	C.CAPACITOR CH 50V 0.1U	2	
C5801,02	ECUM1H104ZFN	C.CAPACITOR CH 50V 0.1U	2	
C5806-09	ECUM1H104ZFN	C.CAPACITOR CH 50V 0.1U	4	
C5811-13	ECUM1H104ZFN	C.CAPACITOR CH 50V 0.1U	3	
C5818	ECUM1H100DCN	C.CAPACITOR CH 50V 10P	1	
C5819,20	ECUM1H104ZFN	C.CAPACITOR CH 50V 0.1U	2	
C5822	ECUM1H104ZFN	C.CAPACITOR CH 50V 0.1U	1	
C5901,02	ECUM1H104ZFN	C.CAPACITOR CH 50V 0.1U	2	
C5904	ECUM1H104ZFN	C.CAPACITOR CH 50V 0.1U	1	
C5909	ECUM1H104ZFN	C.CAPACITOR CH 50V 0.1U	1	
C5912	ECEV0JV330Q	E.CAPACITOR CH6.3V 33U	1	
C5913	ECUM1H104ZFN	C.CAPACITOR CH 50V 0.1U	1	
C5951	ECUM1H104ZFN	C.CAPACITOR CH 50V 0.1U	1	
C5952	ECEV1CV470Q	E.CAPACITOR CH 16V 47U	1	
C5953	ECUM1H104ZFN	C.CAPACITOR CH 50V 0.1U	1	
C5954	ECEV1CV220Q	E.CAPACITOR CH 16V 22U	1	
C5955-57	ECUM1H104ZFN	C.CAPACITOR CH 50V 0.1U	3	
C5958	ECEV0JV470Q	E.CAPACITOR CH6.3V 47U	1	
C5959,60	ECUM1H104ZFN	C.CAPACITOR CH 50V 0.1U	2	
C5961	ECEV1CV220Q	E.CAPACITOR CH 16V 22U	1	
C5962,63	ECUM1H104ZFN	C.CAPACITOR CH 50V 0.1U	2	
C5964	ECEV0JV470Q	E.CAPACITOR CH6.3V 47U	1	
C5965,66	ECUM1H104ZFN	C.CAPACITOR CH 50V 0.1U	2	
C5967	ECEV0JV470Q	E.CAPACITOR CH6.3V 47U	1	
C5968,69	ECUM1H104ZFN	C.CAPACITOR CH 50V 0.1U	2	
C5970	ECEV1CV470Q	E.CAPACITOR CH 16V 47U	1	
C5971,72	ECUM1H104ZFN	C.CAPACITOR CH 50V 0.1U	2	
C5973	ECEV0JV470Q	E.CAPACITOR CH6.3V 47U	1	
C5974	ECUM1H104ZFN	C.CAPACITOR CH 50V 0.1U	1	
C5975	ECEA1AGE471	E.CAPACITOR 10V 470U	1	
C5976	ECEV1CV470Q	E.CAPACITOR CH 16V 47U	1	
C5977,78	ECUM1H104ZFN	C.CAPACITOR CH 50V 0.1U	2	
C5979	ECEV1CV220Q	E.CAPACITOR CH 16V 22U	1	
C5980	ECEV1CV470Q	E.CAPACITOR CH 16V 47U	1	
C5981-83	ECUM1H104ZFN	C.CAPACITOR CH 50V 0.1U	3	
C5984	ECEV1CV470Q	E.CAPACITOR CH 16V 47U	1	
C5985	ECUM1H104ZFN	C.CAPACITOR CH 50V 0.1U	1	
C5986	ECEV1CV470Q	E.CAPACITOR CH 16V 47U	1	
C5987,88	ECUM1H104ZFN	C.CAPACITOR CH 50V 0.1U	2	
C5989	ECEV1EV100Q	E.CAPACITOR CH 25V 10U	1	
C5990	ECUM1H104ZFN	C.CAPACITOR CH 50V 0.1U	1	
C5991	ECEV1CV220Q	E.CAPACITOR CH 16V 22U	1	
C5992	ECUM1H104ZFN	C.CAPACITOR CH 50V 0.1U	1	
C5995,96	ECEA1CGE470	E.CAPACITOR 16V 47U	2	
D5001	MA3020	DIODE	1	
D5101	MA3020	DIODE	1	
D5201	MA3036-H	DIODE	1	
D5401	MA3036-H	DIODE	1	
D5402	MA3030-H	DIODE	1	
D5403	MA3033-L	DIODE	1	
D5901	MA152K	DIODE	1	
D5951-62	MA701A	DIODE	12	
FL5951-55	VLF1016A470	FILTER	5	
IC5001	AN3730FA	IC	1	

Ref.No.	Part No.	Part Name & Description	Pcs	Remarks
IC5101	M52055FP	IC	1	
IC5102	AN3730FA	IC	1	
IC5201	TC7S32F	IC	1	
IC5202	MC14053BF	IC	1	
IC5203	NJM319M	IC	1	
IC5204	NJM082BM	IC	1	
IC5205	TC7SH32F	IC	1	
IC5206	NJM084M	IC	1	
IC5207	AN3740FAP	IC	1	
IC5208	MC74HC4066F	IC	1	
IC5209	NJM082BM	IC	1	
IC5401	NJM082BM	IC	1	
IC5402	TC7W08F	IC	1	
IC5403	TC7S32F	IC	1	
IC5404	MC14053BF	IC	1	
IC5405	NJM082BM	IC	1	
IC5406	NJM084M	IC	1	
IC5407	NJM319M	IC	1	
IC5408	AN3740FAP	IC	1	
IC5409	MC74HC4066F	IC	1	
IC5410	NJM082BM	IC	1	
IC5411	T74LCX244F	IC	1	
IC5601	UPC1663G	IC	1	
IC5602	NJM084M	IC	1	
IC5603	CXD2302Q	IC	1	
IC5701	MB88344PFV	IC	1	
IC5702	NJM084M	IC	1	
IC5703	NJM082BM	IC	1	
IC5801,02	74F04SJ	IC	2	
IC5803	74F08SJ	IC	1	
IC5805	74F151ASJ	IC	1	
IC5806	74F157ASJ	IC	1	
IC5807	MC10H124M	IC	1	
IC5810	TC7S32F	IC	1	
IC5901	T160G22-1225	IC	1	
IC5902	TC7W08F	IC	1	
IC5903	S80727ANDQ	IC	1	
IC5951-54	XC62AP3002P	IC	4	
IC5955,56	AN78M05F	IC	2	
IC5957,58	AN79M05F	IC	2	
IC5959	NJM78L09UA	IC	1	
L5701	VLQ0163J100	COIL 10UH	1	
L5801	VLQ0163J8R2	COIL 8.2UH	1	
L5802	VLQ0163J2R7	COIL 2.7UH	1	
L5951-53	VLP0133	COIL	3	
P5951	VJP3454B096	CONNECTOR (MALE)	1	
P5952	VJP1231R	CONNECTOR (MALE)	1	
P5953	VJP1231T	CONNECTOR (MALE) 4P	1	
Q5001	XN5531	TRANSISTOR-RESISTOR	1	
Q5002	2SC2295-C	TRANSISTOR	1	
Q5003	XN5531	TRANSISTOR-RESISTOR	1	
Q5004-12	2SC2295-C	TRANSISTOR	9	
Q5101	XN5531	TRANSISTOR-RESISTOR	1	
Q5102	2SC2295-C	TRANSISTOR	1	
Q5103	XN5531	TRANSISTOR-RESISTOR	1	
Q5104-10	2SC2295-C	TRANSISTOR	7	
Q5202,03	2SC2295-C	TRANSISTOR	2	
Q5204	2SA1022-C	TRANSISTOR	1	
Q5401-03	2SC2295-C	TRANSISTOR	3	
Q5404	2SA1022-C	TRANSISTOR	1	
Q5601,02	2SC2295-C	TRANSISTOR	2	
Q5603	XN5531	TRANSISTOR-RESISTOR	1	
Q5606-08	2SC2295-C	TRANSISTOR	3	
QR5101	UN2213	TRANSISTOR-RESISTOR	1	
QR5401,02	UN2213	TRANSISTOR-RESISTOR	2	
R5004	ERJ6GEYG101	M.RESISTOR CH 1/10W 100	1	
R5006	ERJ6GEYG101	M.RESISTOR CH 1/10W 100	1	
R5007	ERJ6GEYG221	M.RESISTOR CH 1/10W 220	1	
R5008-11	ERJ6GEYG470	M.RESISTOR CH 1/10W 47	4	
R5012	ERJ6GEYG222	M.RESISTOR CH 1/10W 2.2K	1	

Ref.No.	Part No.	Part Name & Description	Pcs	Remarks
R5013,14	ERJ6GEYG470	M.RESISTOR CH 1/10W 47	2	
R5015	ERJ6GEYG221	M.RESISTOR CH 1/10W 220	1	
R5016	ERJ6GEYG222	M.RESISTOR CH 1/10W 2.2K	1	
R5018	ERJ6GEYG470	M.RESISTOR CH 1/10W 47	1	
R5019	ERJ6GEYG391	M.RESISTOR CH 1/10W 390	1	
R5020-22	ERJ6GEYG470	M.RESISTOR CH 1/10W 47	3	
R5023	ERJ6GEYG391	M.RESISTOR CH 1/10W 390	1	
R5025	ERJ6GEYG121	M.RESISTOR CH 1/10W 120	1	
R5026,27	ERJ6GEYG222	M.RESISTOR CH 1/10W 2.2K	2	
R5028	ERJ6GEYG470	M.RESISTOR CH 1/10W 47	1	
R5029	ERJ6GEYG121	M.RESISTOR CH 1/10W 120	1	
R5030	ERJ6GEYG470	M.RESISTOR CH 1/10W 47	1	
R5031	ERJ6GEYG181	M.RESISTOR CH 1/10W 180	1	
R5032	ERJ6GEYG152	M.RESISTOR CH 1/10W 1.5K	1	
R5033	ERJ6GEYG470	M.RESISTOR CH 1/10W 47	1	
R5034	ERJ6GEYG222	M.RESISTOR CH 1/10W 2.2K	1	
R5035,36	ERJ6GEYG470	M.RESISTOR CH 1/10W 47	2	
R5037	ERJ6GEYG222	M.RESISTOR CH 1/10W 2.2K	1	
R5038	ERJ6GEYG470	M.RESISTOR CH 1/10W 47	1	
R5039	ERJ6GEYG222	M.RESISTOR CH 1/10W 2.2K	1	
R5040	ERJ6GEYG470	M.RESISTOR CH 1/10W 47	1	
R5041	ERJ6GEYG102	M.RESISTOR CH 1/10W 1K	1	
R5042	ERJ6GEYG470	M.RESISTOR CH 1/10W 47	1	
R5043	ERJ6GEYF472	M.RESISTOR CH 1/10W 4.7K	1	
R5044	ERJ6GEYG470	M.RESISTOR CH 1/10W 47	1	
R5045	ERJ6GEYG152	M.RESISTOR CH 1/10W 1.5K	1	
R5046,47	ERJ6GEYG122	M.RESISTOR CH 1/10W 1.2K	2	
R5048	ERJ6GEYG470	M.RESISTOR CH 1/10W 47	1	
R5049,50	ERJ6GEYG122	M.RESISTOR CH 1/10W 1.2K	2	
R5051	ERJ6GEYG222	M.RESISTOR CH 1/10W 2.2K	1	
R5052	ERJ6GEYG122	M.RESISTOR CH 1/10W 1.2K	1	
R5053	ERJ6GEYG222	M.RESISTOR CH 1/10W 2.2K	1	
R5054	ERJ6GEYG470	M.RESISTOR CH 1/10W 47	1	
R5101,02	ERJ6GEYG122	M.RESISTOR CH 1/10W 1.2K	2	
R5103	ERJ6GEYG101	M.RESISTOR CH 1/10W 100	1	
R5104,05	ERJ6GEYG122	M.RESISTOR CH 1/10W 1.2K	2	
R5106	ERJ6GEYG101	M.RESISTOR CH 1/10W 100	1	
R5107	ERJ6GEYG221	M.RESISTOR CH 1/10W 220	1	
R5108-11	ERJ6GEYG470	M.RESISTOR CH 1/10W 47	4	
R5112	ERJ6GEYG221	M.RESISTOR CH 1/10W 220	1	
R5114,15	ERJ6GEYG470	M.RESISTOR CH 1/10W 47	2	
R5116	ERJ6GEYG222	M.RESISTOR CH 1/10W 2.2K	1	
R5117	ERJ6GEYG470	M.RESISTOR CH 1/10W 47	1	
R5118	ERJ6GEYG222	M.RESISTOR CH 1/10W 2.2K	1	
R5119	ERJ6GEYG470	M.RESISTOR CH 1/10W 47	1	
R5120	ERJ6GEYG391	M.RESISTOR CH 1/10W 390	1	
R5121	ERJ6GEYG470	M.RESISTOR CH 1/10W 47	1	
R5122	ERJ6GEYG391	M.RESISTOR CH 1/10W 390	1	
R5124	ERJ6GEYG122	M.RESISTOR CH 1/10W 1.2K	1	
R5125	ERJ6GEYG222	M.RESISTOR CH 1/10W 2.2K	1	
R5126	ERJ6GEYG121	M.RESISTOR CH 1/10W 120	1	
R5127	ERJ6GEYG222	M.RESISTOR CH 1/10W 2.2K	1	
R5128,29	ERJ6GEYG470	M.RESISTOR CH 1/10W 47	2	
R5131	ERJ6GEYG121	M.RESISTOR CH 1/10W 120	1	
R5132	ERJ6GEYG181	M.RESISTOR CH 1/10W 180	1	
R5133	ERJ6GEYF473	M.RESISTOR CH 1/10W 47K	1	
R5134	ERJ6GEYG152	M.RESISTOR CH 1/10W 1.5K	1	
R5135,36	ERJ6GEYG470	M.RESISTOR CH 1/10W 47	2	
R5137	ERJ6GEYG222	M.RESISTOR CH 1/10W 2.2K	1	
R5138	ERJ6GEYG470	M.RESISTOR CH 1/10W 47	1	
R5139	ERJ6GEYG222	M.RESISTOR CH 1/10W 2.2K	1	
R5141	ERJ6GEYG102	M.RESISTOR CH 1/10W 1K	1	
R5142	ERJ6GEYF472	M.RESISTOR CH 1/10W 4.7K	1	
R5143	ERJ6GEYG470	M.RESISTOR CH 1/10W 47	1	
R5144	ERJ6GEYG103	M.RESISTOR CH 1/10W 10K	1	
R5145	ERJ6GEYG470	M.RESISTOR CH 1/10W 47	1	
R5146	ERJ6GEYG222	M.RESISTOR CH 1/10W 2.2K	1	
R5147,48	ERJ6GEYG470	M.RESISTOR CH 1/10W 47	2	
R5149	ERJ6GEYG122	M.RESISTOR CH 1/10W 1.2K	1	
R5150,51	ERJ6GEYG222	M.RESISTOR CH 1/10W 2.2K	2	
R5152	ERJ6GEYG470	M.RESISTOR CH 1/10W 47	1	
R5206	ERJ6GEYG470	M.RESISTOR CH 1/10W 47	1	
R5208	ERJ6GEYG103	M.RESISTOR CH 1/10W 10K	1	
R5210	ERJ6GEYG222	M.RESISTOR CH 1/10W 2.2K	1	
R5211	ERJ6GEYG103	M.RESISTOR CH 1/10W 10K	1	

Ref.No.	Part No.	Part Name & Description	Pcs	Remarks
R5212	ERJ6GEYG273	M.RESISTOR CH 1/10W 27K	1	
R5214	ERJ6GEYG222	M.RESISTOR CH 1/10W 2.2K	1	
R5215	ERJ6GEYG682	M.REISITOR CH 1/10W 6.8K	1	
R5216	ERJ6GEYG222	M.RESISTOR CH 1/10W 2.2K	1	
R5217	ERJ6GEYG102	M.RESISTOR CH 1/10W 1K	1	
R5218	ERJ6GEYG222	M.RESISTOR CH 1/10W 2.2K	1	
R5219	ERJ6GEYG103	M.RESISTOR CH 1/10W 10K	1	
R5220	ERJ6GEYG470	M.RESISTOR CH 1/10W 47	1	
R5222,23	ERJ6GEYG470	M.RESISTOR CH 1/10W 47	2	
R5225	ERJ6GEYG222	M.RESISTOR CH 1/10W 2.2K	1	
R5227	ERJ6GEYG103	M.RESISTOR CH 1/10W 10K	1	
R5229	ERJ6GEYG103	M.RESISTOR CH 1/10W 10K	1	
R5230	ERJ6GEYG122	M.RESISTOR CH 1/10W 1.2K	1	
R5231,32	ERJ6GEYG103	M.RESISTOR CH 1/10W 10K	2	
R5233	ERJ6GEYG122	M.RESISTOR CH 1/10W 1.2K	1	
R5234	ERJ6GEYG470	M.RESISTOR CH 1/10W 47	1	
R5235	ERJ6GEYG103	M.RESISTOR CH 1/10W 10K	1	
R5238	ERJ6GEYG122	M.RESISTOR CH 1/10W 1.2K	1	
R5239	ERJ6GEYG470	M.RESISTOR CH 1/10W 47	1	
R5240	ERJ6GEYG222	M.RESISTOR CH 1/10W 2.2K	1	
R5242	ERJ6GEYG222	M.RESISTOR CH 1/10W 2.2K	1	
R5243	ERJ6GEYG122	M.RESISTOR CH 1/10W 1.2K	1	
R5244	ERJ6GEYG102	M.RESISTOR CH 1/10W 1K	1	
R5245	ERJ6GEYG821	M.RESISTOR CH 1/10W 820	1	
R5246	ERJ6GEYF472	M.RESISTOR CH 1/10W 4.7K	1	
R5247	ERJ6GEYG470	M.RESISTOR CH 1/10W 47	1	
R5248	ERJ6GEYG122	M.RESISTOR CH 1/10W 1.2K	1	
R5249	ERJ6GEYG331	M.RESISTOR CH 1/10W 330	1	
R5250	ERJ6GEYG122	M.RESISTOR CH 1/10W 1.2K	1	
R5251	ERJ6GEYG470	M.RESISTOR CH 1/10W 47	1	
R5252	ERJ6GEYG680	M.RESISTOR CH 1/10W 68	1	
R5253	ERJ6GEYG224	M.RESISTOR CH 1/10W 220K	1	
R5255	ERJ6GEYG821	M.RESISTOR CH 1/10W 820	1	
R5256	ERJ6GEYG102	M.RESISTOR CH 1/10W 1K	1	
R5257	ERJ6GEYF822	M.RESISTOR CH 1/10W 8.2K	1	
R5258	ERJ6GEYG122	M.RESISTOR CH 1/10W 1.2K	1	
R5259	ERJ6GEYG182	M.RESISTOR CH 1/10W 1.8K	1	
R5262	ERJ6GEYG332	M.RESISTOR CH 1/10W 3.3K	1	
R5263	ERJ6GEYG122	M.RESISTOR CH 1/10W 1.2K	1	
R5264	ERJ6GEYG153	M.RESISTOR CH 1/10W 15K	1	
R5265	ERJ6GEYG562	M.RESISTOR CH 1/10W 5.6K	1	
R5266	ERJ6GEYF822	M.RESISTOR CH 1/10W 8.2K	1	
R5267	ERJ6GEYG222	M.RESISTOR CH 1/10W 2.2K	1	
R5269	ERJ6GEYG392	M.RESISTOR CH 1/10W 3.9K	1	
R5270	ERJ6GEYG122	M.RESISTOR CH 1/10W 1.2K	1	
R5271	ERJ6GEYG470	M.RESISTOR CH 1/10W 47	1	
R5273	ERJ6GEYG222	M.RESISTOR CH 1/10W 2.2K	1	
R5277	ERJ6GEYG222	M.RESISTOR CH 1/10W 2.2K	1	
R5281	ERJ6GEYG222	M.RESISTOR CH 1/10W 2.2K	1	
R5283,84	ERJ6GEYG470	M.RESISTOR CH 1/10W 47	2	
R5288	ERJ6GEYG122	M.RESISTOR CH 1/10W 1.2K	1	
R5290	ERJ6GEYF822	M.RESISTOR CH 1/10W 8.2K	1	
R5291	ERJ6GEYG682	M.REISITOR CH 1/10W 6.8K	1	
R5292,93	ERJ6GEYG122	M.RESISTOR CH 1/10W 1.2K	2	
R5302,03	ERJ6GEYG122	M.RESISTOR CH 1/10W 1.2K	2	
R5401,02	ERJ6GEYG470	M.RESISTOR CH 1/10W 47	2	
R5410,11	ERJ6GEYG222	M.RESISTOR CH 1/10W 2.2K	2	
R5413	ERJ6GEYG470	M.RESISTOR CH 1/10W 47	1	
R5414	ERJ6GEYG222	M.RESISTOR CH 1/10W 2.2K	1	
R5415	ERJ6GEYG273	M.RESISTOR CH 1/10W 27K	1	
R5416	ERJ6GEYG222	M.RESISTOR CH 1/10W 2.2K	1	
R5417	ERJ6GEYG122	M.RESISTOR CH 1/10W 1.2K	1	
R5418	ERJ6GEYG103	M.RESISTOR CH 1/10W 10K	1	
R5419	ERJ6GEYG682	M.REISITOR CH 1/10W 6.8K	1	
R5420	ERJ6GEYF473	M.RESISTOR CH 1/10W 47K	1	
R5421	ERJ6GEYG122	M.RESISTOR CH 1/10W 1.2K	1	
R5422	ERJ6GEYG102	M.RESISTOR CH 1/10W 1K	1	
R5425	ERJ6GEYG470	M.RESISTOR CH 1/10W 47	1	
R5426	ERJ6GEYF473	M.RESISTOR CH 1/10W 47K	1	
R5429	ERJ6GEYG470	M.RESISTOR CH 1/10W 47	1	
R5430	ERJ6GEYG222	M.RESISTOR CH 1/10W 2.2K	1	
R5431	ERJ6GEYG122	M.RESISTOR CH 1/10W 1.2K	1	
R5432	ERJ6GEYG470	M.RESISTOR CH 1/10W 47	1	
R5433	ERJ6GEYG103	M.RESISTOR CH 1/10W 10K	1	
R5434	ERJ6GEYG470	M.RESISTOR CH 1/10W 47	1	

Ref.No.	Part No.	Part Name & Description	Pcs	Remarks
R5435	ERJ6GEYG222	M.RESISTOR CH 1/10W 2.2K	1	
R5436	ERJ6GEYG103	M.RESISTOR CH 1/10W 10K	1	
R5437	ERJ6GEYG122	M.RESISTOR CH 1/10W 1.2K	1	
R5438,39	ERJ6GEYG103	M.RESISTOR CH 1/10W 10K	2	
R5440	ERJ6GEYG122	M.RESISTOR CH 1/10W 1.2K	1	
R5441	ERJ6GEYG470	M.RESISTOR CH 1/10W 47	1	
R5442	ERJ6GEYG103	M.RESISTOR CH 1/10W 10K	1	
R5445	ERJ6GEYG122	M.RESISTOR CH 1/10W 1.2K	1	
R5446	ERJ6GEYG470	M.RESISTOR CH 1/10W 47	1	
R5447	ERJ6GEYG222	M.RESISTOR CH 1/10W 2.2K	1	
R5449	ERJ6GEYG222	M.RESISTOR CH 1/10W 2.2K	1	
R5450	ERJ6GEYG122	M.RESISTOR CH 1/10W 1.2K	1	
R5451	ERJ6GEYG102	M.RESISTOR CH 1/10W 1K	1	
R5452	ERJ6GEYG821	M.RESISTOR CH 1/10W 820	1	
R5453	ERJ6GEYF472	M.RESISTOR CH 1/10W 4.7K	1	
R5454	ERJ6GEYG470	M.RESISTOR CH 1/10W 47	1	
R5455	ERJ6GEYG122	M.RESISTOR CH 1/10W 1.2K	1	
R5456	ERJ6GEYG331	M.RESISTOR CH 1/10W 330	1	
R5457	ERJ6GEYG122	M.RESISTOR CH 1/10W 1.2K	1	
R5458	ERJ6GEYG680	M.RESISTOR CH 1/10W 68	1	
R5459	ERJ6GEYG224	M.RESISTOR CH 1/10W 220K	1	
R5461	ERJ6GEYG821	M.RESISTOR CH 1/10W 820	1	
R5462	ERJ6GEYG102	M.RESISTOR CH 1/10W 1K	1	
R5463	ERJ6GEYF822	M.RESISTOR CH 1/10W 8.2K	1	
R5464	ERJ6GEYG122	M.RESISTOR CH 1/10W 1.2K	1	
R5465	ERJ6GEYG182	M.RESISTOR CH 1/10W 1.8K	1	
R5468	ERJ6GEYG332	M.RESISTOR CH 1/10W 3.3K	1	
R5469	ERJ6GEYG122	M.RESISTOR CH 1/10W 1.2K	1	
R5470	ERJ6GEYG153	M.RESISTOR CH 1/10W 15K	1	
R5471	ERJ6GEYG562	M.RESISTOR CH 1/10W 5.6K	1	
R5472	ERJ6GEYF822	M.RESISTOR CH 1/10W 8.2K	1	
R5474	ERJ6GEYG122	M.RESISTOR CH 1/10W 1.2K	1	
R5475	ERJ6GEYG392	M.RESISTOR CH 1/10W 3.9K	1	
R5476	ERJ6GEYG470	M.RESISTOR CH 1/10W 47	1	
R5478	ERJ6GEYG222	M.RESISTOR CH 1/10W 2.2K	1	
R5479	ERJ6GEYG122	M.RESISTOR CH 1/10W 1.2K	1	
R5480	ERJ6GEYG222	M.RESISTOR CH 1/10W 2.2K	1	
R5483	ERJ6GEYG222	M.RESISTOR CH 1/10W 2.2K	1	
R5488	ERJ6GEYG102	M.RESISTOR CH 1/10W 1K	1	
R5490,91	ERJ6GEYG470	M.RESISTOR CH 1/10W 47	2	
R5494	ERJ6GEYG470	M.RESISTOR CH 1/10W 47	1	
R5496	ERJ6GEYG470	M.RESISTOR CH 1/10W 47	1	
R5497	ERJ6GEYF822	M.RESISTOR CH 1/10W 8.2K	1	
R5498	ERJ6GEYG682	M.REISITOR CH 1/10W 6.8K	1	
R5499,00	ERJ6GEYG122	M.RESISTOR CH 1/10W 1.2K	2	
R5501	ERJ6RBD333	M.RESISTOR CH 1/10W 33K	1	
R5502	ERJ6RBD223	M.RESISTOR CH 1/10W 22K	1	
R5504,05	ERJ6GEYG122	M.RESISTOR CH 1/10W 1.2K	2	
R5508	ERJ6GEYG122	M.RESISTOR CH 1/10W 1.2K	1	
R5509	ERJ6GEYG103	M.RESISTOR CH 1/10W 10K	1	
R5510	ERJ6GEYG122	M.RESISTOR CH 1/10W 1.2K	1	
R5601	ERJ6GEYF472	M.RESISTOR CH 1/10W 4.7K	1	
R5602	ERJ6GEYG470	M.RESISTOR CH 1/10W 47	1	
R5603	ERJ6GEYG152	M.RESISTOR CH 1/10W 1.5K	1	
R5604,05	ERJ6GEYG470	M.RESISTOR CH 1/10W 47	2	
R5606	ERJ6GEYG222	M.RESISTOR CH 1/10W 2.2K	1	
R5607	ERJ6GEYG102	M.RESISTOR CH 1/10W 1K	1	
R5608,09	ERJ6GEYG151	M.RESISTOR CH 1/10W 150	2	
R5610	ERJ6GEYG102	M.RESISTOR CH 1/10W 1K	1	
R5612,13	ERJ6GEYG221	M.RESISTOR CH 1/10W 220	2	
R5614,15	ERJ6GEYG562	M.RESISTOR CH 1/10W 5.6K	2	
R5616	ERJ6GEYG271	M.RESISTOR CH 1/10W 270	1	
R5618	ERJ6GEYG470	M.RESISTOR CH 1/10W 47	1	
R5620	ERJ6GEYG470	M.RESISTOR CH 1/10W 47	1	
R5621	ERJ6GEYG392	M.RESISTOR CH 1/10W 3.9K	1	
R5622	ERJ6GEYG271	M.RESISTOR CH 1/10W 270	1	
R5623	ERJ6GEYG392	M.RESISTOR CH 1/10W 3.9K	1	
R5624	ERJ6GEYJ820	M.RESISTOR CH 1/10W 82	1	
R5627	ERJ6GEYJ820	M.RESISTOR CH 1/10W 82	1	
R5629	ERJ6GEYG680	M.RESISTOR CH 1/10W 68	1	
R5631	ERJ6GEYG152	M.RESISTOR CH 1/10W 1.5K	1	
R5632	ERJ6GEYG102	M.RESISTOR CH 1/10W 1K	1	
R5634	ERJ6GEYG470	M.RESISTOR CH 1/10W 47	1	
R5635	ERJ6GEYG102	M.RESISTOR CH 1/10W 1K	1	
R5639	ERJ6GEYG102	M.RESISTOR CH 1/10W 1K	1	

Ref.No.	Part No.	Part Name & Description	Pcs	Remarks
R5640	ERJ6GEYG471	M.RESISTOR CH 1/10W 470	1	
R5646	ERJ6GEYG182	M.RESISTOR CH 1/10W 1.8K	1	
R5647	ERJ6GEYG470	M.RESISTOR CH 1/10W 47	1	
R5650	ERJ6GEYG750	M.RESISTOR CH 1/10W 75	1	
R5654	ERJ6GEYG470	M.RESISTOR CH 1/10W 47	1	
R5656	ERJ6RBD102	M.RESISTOR CH 1/10W 1K	1	
R5659	ERJ6RBD102	M.RESISTOR CH 1/10W 1K	1	
R5663	ERJ6GEYG122	M.RESISTOR CH 1/10W 1.2K	1	
R5664	ERJ6GEYG470	M.RESISTOR CH 1/10W 47	1	
R5667	ERJ6GEYG470	M.RESISTOR CH 1/10W 47	1	
R5674	ERJ6GEYG470	M.RESISTOR CH 1/10W 47	1	
R5675,76	ERJ6GEYG122	M.RESISTOR CH 1/10W 1.2K	2	
R5701-03	ERJ6GEYG101	M.RESISTOR CH 1/10W 100	3	
R5704-06	ERJ6GEYG103	M.RESISTOR CH 1/10W 10K	3	
R5707	ERJ6GEYG222	M.RESISTOR CH 1/10W 2.2K	1	
R5708	ERJ6GEYG273	M.RESISTOR CH 1/10W 27K	1	
R5710	ERJ6GEYG102	M.RESISTOR CH 1/10W 1K	1	
R5711	ERJ6GEYG470	M.RESISTOR CH 1/10W 47	1	
R5712	ERJ6GEYF822	M.RESISTOR CH 1/10W 8.2K	1	
R5713,14	ERJ6GEYG102	M.RESISTOR CH 1/10W 1K	2	
R5717	ERJ6GEYG332	M.RESISTOR CH 1/10W 3.3K	1	
R5718	ERJ6GEYG122	M.RESISTOR CH 1/10W 1.2K	1	
R5724	ERJ6GEYG332	M.RESISTOR CH 1/10W 3.3K	1	
R5729	ERJ6GEYG122	M.RESISTOR CH 1/10W 1.2K	1	
R5730	ERJ6GEYG332	M.RESISTOR CH 1/10W 3.3K	1	
R5736	ERJ6GEYG122	M.RESISTOR CH 1/10W 1.2K	1	
R5737,38	ERJ6GEYG470	M.RESISTOR CH 1/10W 47	2	
R5801	ERJ6GEYG682	M.REISITOR CH 1/10W 6.8K	1	
R5802	ERJ6GEYG103	M.RESISTOR CH 1/10W 10K	1	
R5807,08	ERJ6GEYG122	M.RESISTOR CH 1/10W 1.2K	2	
R5809	ERDS2T0	C.RESISTOR 1/4W 0	1	
R5811-13	ERJ6GEYG470	M.RESISTOR CH 1/10W 47	3	
R5818-25	ERJ6GEYG391	M.RESISTOR CH 1/10W 390	8	
R5830-33	ERJ6GEYG122	M.RESISTOR CH 1/10W 1.2K	4	
R5835	ERJ6GEYG122	M.RESISTOR CH 1/10W 1.2K	1	
R5837-39	ERJ6GEYG122	M.RESISTOR CH 1/10W 1.2K	3	
R5840	ERJ6GEYG101	M.RESISTOR CH 1/10W 100	1	
R5845	ERJ6GEYF561	M.RESISTOR CH 1/10W 560	1	
R5864	ERJ6GEYG122	M.RESISTOR CH 1/10W 1.2K	1	
R5866,67	ERJ6GEYG122	M.RESISTOR CH 1/10W 1.2K	2	
R5901-03	ERJ6GEYG103	M.RESISTOR CH 1/10W 10K	3	
R5905	ERJ6GEYG103	M.RESISTOR CH 1/10W 10K	1	
R5906	ERJ6GEYG153	M.RESISTOR CH 1/10W 15K	1	
R5907,08	ERJ6GEYG103	M.RESISTOR CH 1/10W 10K	2	
R5909	ERJ6GEYG470	M.RESISTOR CH 1/10W 47	1	
R5910	ERJ6GEYG153	M.RESISTOR CH 1/10W 15K	1	
R5911	ERJ6GEYG471	M.RESISTOR CH 1/10W 470	1	
R5912	ERJ6GEYF472	M.RESISTOR CH 1/10W 4.7K	1	
R5914-16	ERJ6GEYG470	M.RESISTOR CH 1/10W 47	3	
R5917,18	ERJ6GEYG122	M.RESISTOR CH 1/10W 1.2K	2	
R5921	ERDS2TJ470	C.RESISTOR 1/4W 47	1	
SW5801	VSS0367-04B	SWITCH	1	
TG5101	VJR0646	TEST POINT	1	
TG5201	VJR0646	TEST POINT	1	
TG5401	VJR0646	TEST POINT	1	
TG5801	VJR0646	TEST POINT	1	
TP5001,02	VJR0646	TEST POINT	2	
TP5101,02	VJR0646	TEST POINT	2	
TP5201-04	VJR0646	TEST POINT	4	
TP5401-05	VJR0646	TEST POINT	5	
TP5601,02	VJR0646	TEST POINT	2	
TP5801,02	EYF6CU	TEST POINT	2	
TP5901	VJR0646	TEST POINT	1	
VR5210	VRV0109B203	V.RESISTOR 20K	1	
VR5410	VRV0109B203	V.RESISTOR 20K	1	
VR5601	VRV0109B102	V.RESISTOR 1K	1	
VR5801	VRV0113B501	V.RESISTOR 500	1	
		MISCELLANEOUS		
	VML2143	CARD PULLER	1	

Ref.No.	Part No.	Part Name & Description	Pcs	Remarks
	VML2144	CARD PULLER	1	
■E11	VEP85049A	H4 RF AMP P.C.BOARD	1	(RTL)
C5003-12	ECEV1CV470Q	E.CAPACITOR CH 16V 47U	10	
C5013	ECEV0JV101Q	E.CAPACITOR CH6.3V 100U	1	
C5014	ECEV1CV470Q	E.CAPACITOR CH 16V 47U	1	
C5020,21	ECEV1HV2R2Q	E.CAPACITOR CH 50V 2.2U	2	
C5022,23	ECEV1CV470Q	E.CAPACITOR CH 16V 47U	2	
C5024,25	ECEV1HV2R2Q	E.CAPACITOR CH 50V 2.2U	2	
C5026,27	ECEV1CV470Q	E.CAPACITOR CH 16V 47U	2	
C5052-54	ECUM1H221JCN	C.CAPACITOR CH 50V 220P	3	
C5057-64	ECUM1E104ZFN	C.CAPACITOR CH 25V 0.1U	8	
C5066,67	ECUM1E104ZFN	C.CAPACITOR CH 25V 0.1U	2	
C5069-94	ECUM1E104ZFN	C.CAPACITOR CH 25V 0.1U	26	
C5099,00	ECUM1E104ZFN	C.CAPACITOR CH 25V 0.1U	2	
C5105-08	ECUM1E104ZFN	C.CAPACITOR CH 25V 0.1U	4	
C5110,11	ECUM1E104ZFN	C.CAPACITOR CH 25V 0.1U	2	
C5116-33	ECUM1E104ZFN	C.CAPACITOR CH 25V 0.1U	18	
C5136	ECUM1E104ZFN	C.CAPACITOR CH 25V 0.1U	1	
C5140,41	ECUM1E104ZFN	C.CAPACITOR CH 25V 0.1U	2	
C5202,03	ECUM1E104ZFN	C.CAPACITOR CH 25V 0.1U	2	
C5206,07	ECUM1E104ZFN	C.CAPACITOR CH 25V 0.1U	2	
C5209,10	ECUM1E104ZFN	C.CAPACITOR CH 25V 0.1U	2	
C5600-07	ECUM1E104ZFN	C.CAPACITOR CH 25V 0.1U	8	
C5608	ECUM1H470JCN	C.CAPACITOR CH 50V 47P	1	
C5609-11	ECUM1E104ZFN	C.CAPACITOR CH 25V 0.1U	3	
C5612	ECUM1H330JCN	C.CAPACITOR CH 50V 33P	1	
C5613	ECUM1E104ZFN	C.CAPACITOR CH 25V 0.1U	1	
C5614	ECUX1H473KBN	C.CAPACITOR CH 50V 0.047U	1	
C5615	ECUM1H103KBN	C.CAPACITOR CH 50V 0.01U	1	
C5617	ECUX1H473KBN	C.CAPACITOR CH 50V 0.047U	1	
C5618,19	ECUM1H103KBN	C.CAPACITOR CH 50V 0.01U	2	
C5620,21	ECUM1E104ZFN	C.CAPACITOR CH 25V 0.1U	2	
C5622	ECUM1H270JCN	C.CAPACITOR CH 50V 27P	1	
C5624	ECUM1H560JCN	C.CAPACITOR CH 50V 56P	1	
C5626	ECUM1H101JCN	C.CAPACITOR CH 50V 100P	1	
C5628	ECUM1H121JCN	C.CAPACITOR CH 50V 120P	1	
C5630,31	ECUM1E104ZFN	C.CAPACITOR CH 25V 0.1U	2	
C5632	ECUM1H470JCN	C.CAPACITOR CH 50V 47P	1	
C5633-36	ECUM1E104ZFN	C.CAPACITOR CH 25V 0.1U	4	
C5637,38	ECUM1H102KBN	C.CAPACITOR CH 50V 1000P	2	
C5639,40	ECUM1E104ZFN	C.CAPACITOR CH 25V 0.1U	2	
C5643-45	ECUM1E104ZFN	C.CAPACITOR CH 25V 0.1U	3	
C5646,47	ECUM1H103KBN	C.CAPACITOR CH 50V 0.01U	2	
C5648-58	ECUM1E104ZFN	C.CAPACITOR CH 25V 0.1U	11	
C5659	ECUM1H102KBN	C.CAPACITOR CH 50V 1000P	1	
C5660	ECUM1H182KBN	C.CAPACITOR CH 50V 1800P	1	
C5661-63	ECUM1E104ZFN	C.CAPACITOR CH 25V 0.1U	3	
C5665	ECUM1E104ZFN	C.CAPACITOR CH 25V 0.1U	1	
C5670	ECUM1E104ZFN	C.CAPACITOR CH 25V 0.1U	1	
C5671	ECUM1H330JCN	C.CAPACITOR CH 50V 33P	1	
C5700-07	ECUM1E104ZFN	C.CAPACITOR CH 25V 0.1U	8	
C5708	ECUM1H470JCN	C.CAPACITOR CH 50V 47P	1	
C5709-11	ECUM1E104ZFN	C.CAPACITOR CH 25V 0.1U	3	
C5713	ECUM1E104ZFN	C.CAPACITOR CH 25V 0.1U	1	
C5714	ECUX1H473KBN	C.CAPACITOR CH 50V 0.047U	1	
C5715	ECUM1H103KBN	C.CAPACITOR CH 50V 0.01U	1	
C5717	ECUX1H473KBN	C.CAPACITOR CH 50V 0.047U	1	
C5718,19	ECUM1H103KBN	C.CAPACITOR CH 50V 0.01U	2	
C5720,21	ECUM1E104ZFN	C.CAPACITOR CH 25V 0.1U	2	
C5722	ECUM1H270JCN	C.CAPACITOR CH 50V 27P	1	
C5724	ECUM1H560JCN	C.CAPACITOR CH 50V 56P	1	
C5726	ECUM1H101JCN	C.CAPACITOR CH 50V 100P	1	
C5728	ECUM1H121JCN	C.CAPACITOR CH 50V 120P	1	
C5730,31	ECUM1E104ZFN	C.CAPACITOR CH 25V 0.1U	2	
C5732	ECUM1H470JCN	C.CAPACITOR CH 50V 47P	1	
C5733-36	ECUM1E104ZFN	C.CAPACITOR CH 25V 0.1U	4	
C5737,38	ECUM1H102KBN	C.CAPACITOR CH 50V 1000P	2	
C5739,40	ECUM1E104ZFN	C.CAPACITOR CH 25V 0.1U	2	
C5743-45	ECUM1E104ZFN	C.CAPACITOR CH 25V 0.1U	3	
C5746,47	ECUM1H103KBN	C.CAPACITOR CH 50V 0.01U	2	
C5748-58	ECUM1E104ZFN	C.CAPACITOR CH 25V 0.1U	11	

Ref.No.	Part No.	Part Name & Description	Pcs	Remarks
C5759	ECUM1H102KBN	C.CAPACITOR CH 50V 1000P	1	
C5760	ECUM1H182KBN	C.CAPACITOR CH 50V 1800P	1	
D5001	MA153	DIODE	1	
D5002	MA152WK	DIODE	1	
FL5002-05	VLF0931	FILTER	4	
IC5002	MC74HC32AF	IC	1	
IC5003	MC74HC04AF	IC	1	
IC5004	NJM082BM	IC	1	
IC5005	MC74HC86AF	IC	1	
IC5006,07	TC4S66F	IC	2	
IC5008	NJM082BM	IC	1	
IC5009	MC14053BF	IC	1	
IC5010	AN7805F	IC	1	
IC5011	AN7905F	IC	1	
IC5013	MB88344PFV	IC	1	
IC5014-16	NJM082BM	IC	3	
IC5017	MC14053BF	IC	1	
IC5020	MC10H116L	IC	1	
IC5021	MC10H102L	IC	1	
IC5022	MC10131L	IC	1	
IC5051	UPC1663G	IC	1	
IC5052	NJM1496M	IC	1	
IC5053	NJM082BM	IC	1	
IC5054	UPC1663G	IC	1	
IC5055	NJM1496M	IC	1	
L5600	VLQ0188K1R0N	COIL 1UH	1	
L5601,02	VLQ0188KR47N	COIL 0.47UH	2	
L5603,04	VLQ0188J101	COIL 100UH	2	
L5605,06	VLQ0163KR39	COIL 0.39UH	2	
L5700-02	VLQ0188K1R0N	COIL 1UH	3	
L5703,04	VLQ0188J101	COIL 100UH	2	
L5705,06	VLQ0188KR39N	COIL 0.39UH	2	
P5001	VJP3454B096	CONNECTOR (MALE)	1	
P5002	VJP1230T	CONNECTOR (MALE) 3P	1	
P5003	VJP1230G	CONNECTOR (MALE) 3P	1	
P5004	VJP1230T	CONNECTOR (MALE) 3P	1	
P5005	VJP1230G	CONNECTOR (MALE) 3P	1	
Q5001	2SD601A-R	TRANSISTOR	1	
Q5002	2SB709A-R	TRANSISTOR	1	
Q5006,07	2SA1022-C	TRANSISTOR	2	
Q5008	2SD601A-R	TRANSISTOR	1	
Q5600	XN6537	TRANSISTOR-RESISTOR	1	
Q5601,02	2SC2295-C	TRANSISTOR	2	
Q5603	XN5531	TRANSISTOR-RESISTOR	1	
Q5604	2SC3130	TRANSISTOR	1	
Q5605	XN5531	TRANSISTOR-RESISTOR	1	
Q5606,07	2SK508K512	TRANSISTOR	2	
Q5608	2SC3130	TRANSISTOR	1	
Q5609,10	2SD1979	TRANSISTOR	2	
Q5611-13	2SC3130	TRANSISTOR	3	
Q5614,15	2SK508K512	TRANSISTOR	2	
Q5616-19	XN5531	TRANSISTOR-RESISTOR	4	
Q5620,21	2SC3130	TRANSISTOR	2	
Q5700	XN6537	TRANSISTOR-RESISTOR	1	
Q5701,02	2SC2295-C	TRANSISTOR	2	
Q5703	XN5531	TRANSISTOR-RESISTOR	1	
Q5704	2SC3130	TRANSISTOR	1	
Q5705	XN5531	TRANSISTOR-RESISTOR	1	
Q5706,07	2SK508K512	TRANSISTOR	2	
Q5708	2SC3130	TRANSISTOR	1	
Q5709,10	2SD1979	TRANSISTOR	2	
Q5711-13	2SC3130	TRANSISTOR	3	
Q5714,15	2SK508K512	TRANSISTOR	2	
Q5716-19	XN5531	TRANSISTOR-RESISTOR	4	
Q5720	2SC3130	TRANSISTOR	1	
R5001	ERJ6GEYG103	M.RESISTOR CH 1/10W 10K	1	
R5003	ERJ6GEYG103	M.RESISTOR CH 1/10W 10K	1	
R5010,11	ERJ6GEYG470	M.RESISTOR CH 1/10W 47	2	

Ref.No.	Part No.	Part Name & Description	Pcs	Remarks
R5012,13	ERJ6GEYG103	M.RESISTOR CH 1/10W 10K	2	
R5015	ERJ6GEYG103	M.RESISTOR CH 1/10W 10K	1	
R5018,19	ERJ6GEYG103	M.RESISTOR CH 1/10W 10K	2	
R5020	ERJ6GEYG104	M.RESISTOR CH 1/10W 100K	1	
R5021	ERJ6GEYG683	M.RESISTOR CH 1/10W 68K	1	
R5022-26	ERJ6GEYG103	M.RESISTOR CH 1/10W 10K	5	
R5040	ERJ6GEYG392	M.RESISTOR CH 1/10W 3.9K	1	
R5041,42	ERJ6GEYG103	M.RESISTOR CH 1/10W 10K	2	
R5043	ERJ6GEYG562	M.RESISTOR CH 1/10W 5.6K	1	
R5044	ERJ6GEYG392	M.RESISTOR CH 1/10W 3.9K	1	
R5046-48	ERJ6GEYG101	M.RESISTOR CH 1/10W 100	3	
R5049,50	ERJ6GEYG103	M.RESISTOR CH 1/10W 10K	2	
R5051	ERJ6GEYG392	M.RESISTOR CH 1/10W 3.9K	1	
R5052-54	ERJ6GEYG103	M.RESISTOR CH 1/10W 10K	3	
R5055	ERJ6GEYG562	M.RESISTOR CH 1/10W 5.6K	1	
R5056	ERJ6GEYG392	M.RESISTOR CH 1/10W 3.9K	1	
R5057	ERJ6GEYG103	M.RESISTOR CH 1/10W 10K	1	
R5058	ERJ6GEYG392	M.RESISTOR CH 1/10W 3.9K	1	
R5059,60	ERJ6GEYG103	M.RESISTOR CH 1/10W 10K	2	
R5061	ERJ6GEYG562	M.RESISTOR CH 1/10W 5.6K	1	
R5062	ERJ6GEYG392	M.RESISTOR CH 1/10W 3.9K	1	
R5063-65	ERJ6GEYG103	M.RESISTOR CH 1/10W 10K	3	
R5069-80	ERJ6GEYG101	M.RESISTOR CH 1/10W 100	12	
R5081	ERJ6RBD472	M.RESISTOR CH 1/10W 4.7K	1	
R5082	ERJ6RBD122	M.RESISTOR CH 1/10W 1.2K	1	
R5083,84	ERJ6RBD153	M.RESISTOR CH 1/10W 15K	2	
R5085	ERJ6GEYG103	M.RESISTOR CH 1/10W 10K	1	
R5086	ERJ6RBD472	M.RESISTOR CH 1/10W 4.7K	1	
R5087	ERJ6RBD122	M.RESISTOR CH 1/10W 1.2K	1	
R5088,89	ERJ6RBD153	M.RESISTOR CH 1/10W 15K	2	
R5090	ERJ6GEYG103	M.RESISTOR CH 1/10W 10K	1	
R5091	ERJ6RBD223	M.RESISTOR CH 1/10W 22K	1	
R5092,93	ERJ6RBD103	M.RESISTOR CH 1/10W 10K	2	
R5094	ERJ6RBD333	M.RESISTOR CH 1/10W 33K	1	
R5095	ERJ6RBD153	M.RESISTOR CH 1/10W 15K	1	
R5096	ERJ6RBD223	M.RESISTOR CH 1/10W 22K	1	
R5097,98	ERJ6RBD103	M.RESISTOR CH 1/10W 10K	2	
R5099	ERJ6RBD333	M.RESISTOR CH 1/10W 33K	1	
R5100	ERJ6RBD153	M.RESISTOR CH 1/10W 15K	1	
R5111	ERJ6RBD223	M.RESISTOR CH 1/10W 22K	1	
R5112	ERJ6RBD472	M.RESISTOR CH 1/10W 4.7K	1	
R5113	ERJ6RBD272	M.RESISTOR CH 1/10W 2.7K	1	
R5114,15	ERJ6RBD103	M.RESISTOR CH 1/10W 10K	2	
R5116	ERJ6RBD223	M.RESISTOR CH 1/10W 22K	1	
R5117	ERJ6RBD472	M.RESISTOR CH 1/10W 4.7K	1	
R5118	ERJ6RBD272	M.RESISTOR CH 1/10W 2.7K	1	
R5119,20	ERJ6RBD103	M.RESISTOR CH 1/10W 10K	2	
R5122	ERJ6GEYG122	M.RESISTOR CH 1/10W 1.2K	1	
R5130-33	ERJ6GEYG101	M.RESISTOR CH 1/10W 100	4	
R5140-45	ERJ6GEYG101	M.RESISTOR CH 1/10W 100	6	
R5146	ERJ6RBD223	M.RESISTOR CH 1/10W 22K	1	
R5148	ERJ6RBD562	M.RESISTOR CH 1/10W 5.6K	1	
R5149	ERJ6RBD333	M.RESISTOR CH 1/10W 33K	1	
R5150	ERJ6RBD103	M.RESISTOR CH 1/10W 10K	1	
R5151	ERJ6RBD223	M.RESISTOR CH 1/10W 22K	1	
R5153	ERJ6RBD562	M.RESISTOR CH 1/10W 5.6K	1	
R5154	ERJ6RBD333	M.RESISTOR CH 1/10W 33K	1	
R5155	ERJ6RBD103	M.RESISTOR CH 1/10W 10K	1	
R5156	ERJ6GEYG103	M.RESISTOR CH 1/10W 10K	1	
R5161	ERJ6GEYG103	M.RESISTOR CH 1/10W 10K	1	
R5171,72	ERJ6GEYG101	M.RESISTOR CH 1/10W 100	2	
R5200,01	ERJ6GEYG101	M.RESISTOR CH 1/10W 100	2	
R5202-05	ERJ6GEYG471	M.RESISTOR CH 1/10W 470	4	
R5206,07	ERJ6GEYG101	M.RESISTOR CH 1/10W 100	2	
R5208-10	ERJ6GEYG471	M.RESISTOR CH 1/10W 470	3	
R5211,12	ERJ6GEYG101	M.RESISTOR CH 1/10W 100	2	
R5214,15	ERJ6GEYG332	M.RESISTOR CH 1/10W 3.3K	2	
R5216,17	ERJ6GEYG121	M.RESISTOR CH 1/10W 120	2	
R5218,19	ERJ6GEYJ820	M.RESISTOR CH 1/10W 82	2	
R5230	ERJ6GEYG153	M.RESISTOR CH 1/10W 15K	1	
R5231,32	ERJ6GEYG470	M.RESISTOR CH 1/10W 47	2	
R5600,01	ERJ6RED470	M.RESISTOR CH 1/10W 47	2	
R5602	ERJ6RED560	M.RESISTOR CH 1/10W 56	1	
R5603,04	ERJ6RBD271	M.RESISTOR CH 1/10W 270	2	
R5605	ERJ6RED680	M.RESISTOR CH 1/10W 68	1	

Ref.No.	Part No.	Part Name & Description	Pcs	Remarks
R5606	ERJ6RBD222	M.RESISTOR CH 1/10W 2.2K	1	
R5607,08	ERJ6RBD391	M.RESISTOR CH 1/10W 390	2	
R5609	ERJ6RBD222	M.RESISTOR CH 1/10W 2.2K	1	
R5610,11	ERJ6GEYG470	M.RESISTOR CH 1/10W 47	2	
R5612	ERJ6GEYG330	M.RESISTOR CH 1/10W 33	1	
R5613	ERJ6GEYG272	M.RESISTOR CH 1/10W 2.7K	1	
R5614	ERJ6GEYF472	M.RESISTOR CH 1/10W 4.7K	1	
R5615	ERJ6GEYG470	M.RESISTOR CH 1/10W 47	1	
R5616,17	ERJ6GEYG330	M.RESISTOR CH 1/10W 33	2	
R5618,19	ERJ6GEYG332	M.RESISTOR CH 1/10W 3.3K	2	
R5620,21	ERJ6GEYG470	M.RESISTOR CH 1/10W 47	2	
R5622,23	ERJ6GEYG330	M.RESISTOR CH 1/10W 33	2	
R5624,25	ERJ6GEYG152	M.RESISTOR CH 1/10W 1.5K	2	
R5626	ERJ6RBD181	M.RESISTOR CH 1/10W 180	1	
R5627	ERJ6RBD103	M.RESISTOR CH 1/10W 10K	1	
R5628	ERJ6RBD391	M.RESISTOR CH 1/10W 390	1	
R5629	ERJ6RBD181	M.RESISTOR CH 1/10W 180	1	
R5630	ERJ6RBD103	M.RESISTOR CH 1/10W 10K	1	
R5631	ERJ6GEYG221	M.RESISTOR CH 1/10W 220	1	
R5632	ERJ6GEYG222	M.RESISTOR CH 1/10W 2.2K	1	
R5633	ERJ6GEYG470	M.RESISTOR CH 1/10W 47	1	
R5634	ERJ6GEYG330	M.RESISTOR CH 1/10W 33	1	
R5635	ERJ6GEYG272	M.RESISTOR CH 1/10W 2.7K	1	
R5637,38	ERJ6GEYG470	M.RESISTOR CH 1/10W 47	2	
R5639,40	ERJ6GEYG122	M.RESISTOR CH 1/10W 1.2K	2	
R5642,43	ERJ6GEYG103	M.RESISTOR CH 1/10W 10K	2	
R5644	ERJ6GEYG330	M.RESISTOR CH 1/10W 33	1	
R5645	ERJ6GEYG102	M.RESISTOR CH 1/10W 1K	1	
R5646,47	ERJ6GEYG470	M.RESISTOR CH 1/10W 47	2	
R5648	ERJ6GEYG330	M.RESISTOR CH 1/10W 33	1	
R5649	ERJ6GEYG102	M.RESISTOR CH 1/10W 1K	1	
R5650,51	ERJ6GEYG470	M.RESISTOR CH 1/10W 47	2	
R5652	ERJ6GEYG330	M.RESISTOR CH 1/10W 33	1	
R5653	ERJ6GEYG182	M.RESISTOR CH 1/10W 1.8K	1	
R5654,55	ERJ6GEYG470	M.RESISTOR CH 1/10W 47	2	
R5656,57	ERJ6GEYG331	M.RESISTOR CH 1/10W 330	2	
R5658,59	ERJ6GEYG102	M.RESISTOR CH 1/10W 1K	2	
R5660	ERJ6GEYG152	M.RESISTOR CH 1/10W 1.5K	1	
R5661	ERJ6RBD332	M.RESISTOR CH 1/10W 3.3K	1	
R5662	ERJ6RBD221	M.RESISTOR CH 1/10W 220	1	
R5663	ERJ6RBD332	M.RESISTOR CH 1/10W 3.3K	1	
R5664-66	ERJ6GEYG152	M.RESISTOR CH 1/10W 1.5K	3	
R5667,68	ERJ6GEYG470	M.RESISTOR CH 1/10W 47	2	
R5669,70	ERJ6GEYG330	M.RESISTOR CH 1/10W 33	2	
R5671,72	ERJ6GEYG222	M.RESISTOR CH 1/10W 2.2K	2	
R5673,74	ERJ6GEYG470	M.RESISTOR CH 1/10W 47	2	
R5675,76	ERJ6GEYG330	M.RESISTOR CH 1/10W 33	2	
R5677,78	ERJ6RBD391	M.RESISTOR CH 1/10W 390	2	
R5679,80	ERJ6RBD222	M.RESISTOR CH 1/10W 2.2K	2	
R5681,82	ERJ6RED470	M.RESISTOR CH 1/10W 47	2	
R5683,84	ERJ6GEYG470	M.RESISTOR CH 1/10W 47	2	
R5685,86	ERJ6GEYG330	M.RESISTOR CH 1/10W 33	2	
R5687,88	ERJ6GEYF472	M.RESISTOR CH 1/10W 4.7K	2	
R5689	ERJ6GEYG330	M.RESISTOR CH 1/10W 33	1	
R5690	ERJ6GEYG182	M.RESISTOR CH 1/10W 1.8K	1	
R5691	ERJ6GEYG470	M.RESISTOR CH 1/10W 47	1	
R5692	ERJ6GEYF472	M.RESISTOR CH 1/10W 4.7K	1	
R5693-96	ERJ6GEYG102	M.RESISTOR CH 1/10W 1K	4	
R5697	ERJ6RBD821	M.RESISTOR CH 1/10W 820	1	
R5698	ERJ6RBD102	M.RESISTOR CH 1/10W 1K	1	
R5699-02	ERJ6GEYG560	M.RESISTOR CH 1/10W 56	4	
R5703	ERJ6RBD822	M.RESISTOR CH 1/10W 8.2K	1	
R5704	ERJ6RBD391	M.RESISTOR CH 1/10W 390	1	
R5705	ERJ6RBD332	M.RESISTOR CH 1/10W 3.3K	1	
R5706,07	ERJ6RBD392	M.RESISTOR CH 1/10W 3.9K	2	
R5708	ERJ6RBD153	M.RESISTOR CH 1/10W 15K	1	
R5709	ERJ6GEYG103	M.RESISTOR CH 1/10W 10K	1	
R5710	ERJ6GEYG470	M.RESISTOR CH 1/10W 47	1	
R5711-15	ERJ6GEYG122	M.RESISTOR CH 1/10W 1.2K	5	
R5717	ERJ6GEYF472	M.RESISTOR CH 1/10W 4.7K	1	
R5718	ERJ6GEYG330	M.RESISTOR CH 1/10W 33	1	
R5719	ERJ6GEYG102	M.RESISTOR CH 1/10W 1K	1	
R5720	ERJ6GEYG470	M.RESISTOR CH 1/10W 47	1	
R5800,01	ERJ6RED470	M.RESISTOR CH 1/10W 47	2	
R5802	ERJ6RED560	M.RESISTOR CH 1/10W 56	1	

Ref.No.	Part No.	Part Name & Description	Pcs	Remarks
R5803,04	ERJ6RBD271	M.RESISTOR CH 1/10W 270	2	
R5805	ERJ6RBD121	M.RESISTOR CH 1/10W 120	1	
R5806	ERJ6RBD222	M.RESISTOR CH 1/10W 2.2K	1	
R5807,08	ERJ6RBD391	M.RESISTOR CH 1/10W 390	2	
R5809	ERJ6RBD222	M.RESISTOR CH 1/10W 2.2K	1	
R5810,11	ERJ6GEYG470	M.RESISTOR CH 1/10W 47	2	
R5812	ERJ6GEYG330	M.RESISTOR CH 1/10W 33	1	
R5813	ERJ6GEYG272	M.RESISTOR CH 1/10W 2.7K	1	
R5814	ERJ6GEYF472	M.RESISTOR CH 1/10W 4.7K	1	
R5815	ERJ6GEYG470	M.RESISTOR CH 1/10W 47	1	
R5816,17	ERJ6GEYG330	M.RESISTOR CH 1/10W 33	2	
R5818,19	ERJ6GEYG332	M.RESISTOR CH 1/10W 3.3K	2	
R5820,21	ERJ6GEYG470	M.RESISTOR CH 1/10W 47	2	
R5822,23	ERJ6GEYG330	M.RESISTOR CH 1/10W 33	2	
R5824,25	ERJ6GEYG152	M.RESISTOR CH 1/10W 1.5K	2	
R5826	ERJ6RBD181	M.RESISTOR CH 1/10W 180	1	
R5827	ERJ6RBD103	M.RESISTOR CH 1/10W 10K	1	
R5828	ERJ6RBD391	M.RESISTOR CH 1/10W 390	1	
R5829	ERJ6RBD181	M.RESISTOR CH 1/10W 180	1	
R5830	ERJ6RBD103	M.RESISTOR CH 1/10W 10K	1	
R5831	ERJ6GEYG221	M.RESISTOR CH 1/10W 220	1	
R5832	ERJ6GEYG222	M.RESISTOR CH 1/10W 2.2K	1	
R5833	ERJ6GEYG470	M.RESISTOR CH 1/10W 47	1	
R5834	ERJ6GEYG330	M.RESISTOR CH 1/10W 33	1	
R5835	ERJ6GEYG272	M.RESISTOR CH 1/10W 2.7K	1	
R5836	ERJ6RBD101	M.RESISTOR CH 1/10W 100	1	
R5837	ERJ6GEYG470	M.RESISTOR CH 1/10W 47	1	
R5838	ERJ6GEYG122	M.RESISTOR CH 1/10W 1.2K	1	
R5839,40	ERJ6RBD151	M.RESISTOR CH 1/10W 150	2	
R5842,43	ERJ6GEYG103	M.RESISTOR CH 1/10W 10K	2	
R5844	ERJ6GEYG330	M.RESISTOR CH 1/10W 33	1	
R5845	ERJ6GEYG102	M.RESISTOR CH 1/10W 1K	1	
R5846,47	ERJ6GEYG470	M.RESISTOR CH 1/10W 47	2	
R5848	ERJ6GEYG330	M.RESISTOR CH 1/10W 33	1	
R5849	ERJ6GEYG102	M.RESISTOR CH 1/10W 1K	1	
R5850,51	ERJ6GEYG470	M.RESISTOR CH 1/10W 47	2	
R5852	ERJ6GEYG330	M.RESISTOR CH 1/10W 33	1	
R5853	ERJ6GEYG182	M.RESISTOR CH 1/10W 1.8K	1	
R5854,55	ERJ6GEYG470	M.RESISTOR CH 1/10W 47	2	
R5856,57	ERJ6GEYG331	M.RESISTOR CH 1/10W 330	2	
R5858,59	ERJ6GEYG102	M.RESISTOR CH 1/10W 1K	2	
R5860	ERJ6GEYG152	M.RESISTOR CH 1/10W 1.5K	1	
R5861	ERJ6RBD332	M.RESISTOR CH 1/10W 3.3K	1	
R5862	ERJ6RBD221	M.RESISTOR CH 1/10W 220	1	
R5863	ERJ6RBD332	M.RESISTOR CH 1/10W 3.3K	1	
R5864-66	ERJ6GEYG152	M.RESISTOR CH 1/10W 1.5K	3	
R5867,68	ERJ6GEYG470	M.RESISTOR CH 1/10W 47	2	
R5869,70	ERJ6GEYG330	M.RESISTOR CH 1/10W 33	2	
R5871,72	ERJ6GEYG222	M.RESISTOR CH 1/10W 2.2K	2	
R5873,74	ERJ6GEYG470	M.RESISTOR CH 1/10W 47	2	
R5875,76	ERJ6GEYG330	M.RESISTOR CH 1/10W 33	2	
R5877,78	ERJ6RBD391	M.RESISTOR CH 1/10W 390	2	
R5879,80	ERJ6RBD222	M.RESISTOR CH 1/10W 2.2K	2	
R5881,82	ERJ6RED470	M.RESISTOR CH 1/10W 47	2	
R5883,84	ERJ6GEYG470	M.RESISTOR CH 1/10W 47	2	
R5885,86	ERJ6GEYG330	M.RESISTOR CH 1/10W 33	2	
R5887,88	ERJ6GEYF472	M.RESISTOR CH 1/10W 4.7K	2	
R5889	ERJ6GEYG330	M.RESISTOR CH 1/10W 33	1	
R5890	ERJ6GEYG182	M.RESISTOR CH 1/10W 1.8K	1	
R5891	ERJ6GEYG470	M.RESISTOR CH 1/10W 47	1	
R5892	ERJ6GEYF472	M.RESISTOR CH 1/10W 4.7K	1	
R5893-96	ERJ6GEYG102	M.RESISTOR CH 1/10W 1K	4	
R5897	ERJ6RBD821	M.RESISTOR CH 1/10W 820	1	
R5898	ERJ6RBD102	M.RESISTOR CH 1/10W 1K	1	
R5899-02	ERJ6GEYG560	M.RESISTOR CH 1/10W 56	4	
R5903	ERJ6RBD822	M.RESISTOR CH 1/10W 8.2K	1	
R5904	ERJ6RBD391	M.RESISTOR CH 1/10W 390	1	
R5905	ERJ6RBD332	M.RESISTOR CH 1/10W 3.3K	1	
R5906,07	ERJ6RBD392	M.RESISTOR CH 1/10W 3.9K	2	
R5908	ERJ6RBD153	M.RESISTOR CH 1/10W 15K	1	
R5909	ERJ6GEYG103	M.RESISTOR CH 1/10W 10K	1	
R5910	ERJ6GEYG470	M.RESISTOR CH 1/10W 47	1	
R5911-14	ERJ6GEYG122	M.RESISTOR CH 1/10W 1.2K	4	
R5920	ERJ6GEYG470	M.RESISTOR CH 1/10W 47	1	

Ref.No.	Part No.	Part Name & Description	Pcs	Remarks
RY5001	VSY2069	RELAY	1	
SS5008	VJS1990	CONNECTOR (FEMALE)	1	
SW5008	VJP2536A003	CONNECTOR (MALE)	1	
TG5001-03	VJR0646	TEST POINT	3	
TG5005-09	VJR0646	TEST POINT	5	
TP5001-03	VJR0646	TEST POINT	3	
TP5007-12	VJR0646	TEST POINT	6	
TP5015-20	VJR0646	TEST POINT	6	
VC5600,01	ECV1ZW20X53T	TRIMMER	2	
VC5700,01	ECV1ZW20X53T	TRIMMER	2	
VR5013,14	VRV0112B502	V.RESISTOR 5K	2	
		MISCELLANEOUS		
	VML2143	CARD PULLER	1	
	VML2144	CARD PULLER	1	
	VSC3626	HEAT SINK (A)	2	
	XNG26EFXS	NUT	2	
	XYN26+F10	SCREW	2	
■E12	VEP85151A	HEAD BUFFER P.C.BOARD	1	(RTL)
C5001	ECEV1CV470Q	E.CAPACITOR CH 16V 47U	1	
C5002	ECEV1CV100Q	E.CAPACITOR CH 16V 10U	1	
C5003	ECEV1CV470Q	E.CAPACITOR CH 16V 47U	1	
C5004	ECEV1CV100Q	E.CAPACITOR CH 16V 10U	1	
C5005	ECEV1CV470Q	E.CAPACITOR CH 16V 47U	1	
C5006	ECEV1CV100Q	E.CAPACITOR CH 16V 10U	1	
C5007	ECEV1CV470Q	E.CAPACITOR CH 16V 47U	1	
C5008	ECEV1CV100Q	E.CAPACITOR CH 16V 10U	1	
C5009	ECEV1CV470Q	E.CAPACITOR CH 16V 47U	1	
C5010	ECEV1CV100Q	E.CAPACITOR CH 16V 10U	1	
C5011-14	ECEV1EN4R7Q	E.CAPACITOR CH 25V 4.7U	4	
C5015,16	ECEV1CV100Q	E.CAPACITOR CH 16V 10U	2	
C5017-20	ECEV1HV2R2Q	E.CAPACITOR CH 50V 2.2U	4	
C5021,22	ECEV1CV100Q	E.CAPACITOR CH 16V 10U	2	
C5050-60	ECUX1E104ZFV	C.CAPACITOR CH 25V 0.1U	11	
C5061,62	ECUX1H221JCV	C.CAPACITOR CH 50V 220P	2	
C5063-66	ECUX1H822KBV	C.CAPACITOR CH 50V 8200P	4	
C5100-03	ECUX1E104ZFV	C.CAPACITOR CH 25V 0.1U	4	
C5200-03	ECUX1E104ZFV	C.CAPACITOR CH 25V 0.1U	4	
C5300-02	ECUX1E104ZFV	C.CAPACITOR CH 25V 0.1U	3	
C5303	ECUX1H220JCV	C.CAPACITOR CH 50V 22P	1	
C5304	ECUX1H181JCV	C.CAPACITOR CH 50V 180P	1	
C5305	ECUX1H030CCV	C.CAPACITOR CH 50V 3P	1	
C5306	ECUX1H180JCV	C.CAPACITOR CH 50V 18P	1	
C5307,08	ECUX1H080DCV	C.CAPACITOR CH 50V 8P	2	
C5350-52	ECUX1E104ZFV	C.CAPACITOR CH 25V 0.1U	3	
C5353	ECUX1H220JCV	C.CAPACITOR CH 50V 22P	1	
C5354	ECUX1H181JCV	C.CAPACITOR CH 50V 180P	1	
C5355	ECUX1H030CCV	C.CAPACITOR CH 50V 3P	1	
C5356	ECUX1H180JCV	C.CAPACITOR CH 50V 18P	1	
C5357,58	ECUX1H080DCV	C.CAPACITOR CH 50V 8P	2	
C5400	ECUX1H121JCV	C.CAPACITOR CH 50V 120P	1	
C5401-05	ECUX1E104ZFV	C.CAPACITOR CH 25V 0.1U	5	
C5406,07	ECUX1H102KBV	C.CAPACITOR CH 50V 1000P	2	
C5413-16	ECUX1E104ZFV	C.CAPACITOR CH 25V 0.1U	4	
C5420	ECUX1H121JCV	C.CAPACITOR CH 50V 120P	1	
C5421	ECUX1H221JCV	C.CAPACITOR CH 50V 220P	1	
C5500	ECUX1H121JCV	C.CAPACITOR CH 50V 120P	1	
C5501-05	ECUX1E104ZFV	C.CAPACITOR CH 25V 0.1U	5	
C5506,07	ECUX1H102KBV	C.CAPACITOR CH 50V 1000P	2	
C5514-16	ECUX1E104ZFV	C.CAPACITOR CH 25V 0.1U	3	
C5520	ECUX1H121JCV	C.CAPACITOR CH 50V 120P	1	
C5521	ECUX1H221JCV	C.CAPACITOR CH 50V 220P	1	
C5600-10	ECUX1E104ZFV	C.CAPACITOR CH 25V 0.1U	11	
C5700-10	ECUX1E104ZFV	C.CAPACITOR CH 25V 0.1U	11	

Ref.No.	Part No.	Part Name & Description	Pcs	Remarks
C5801,02	ECUX1H150JCV	C.CAPACITOR CH 50V 15P	2	
D5400,01	MA152WK	DIODE	2	
D5500,01	MA152WK	DIODE	2	
FL5001-05	VLF1016A470	FILTER	5	
IC5003	MC74HC04AF	IC	1	
IC5008,09	TC4S66F	IC	2	
IC5010	XC62AP5002P	IC	1	
IC5011	XC62DN5002P	IC	1	
IC5014	NJM082BM	IC	1	
IC5023,24	MC10H116L	IC	2	
IC5025,26	TC4S69F	IC	2	
IC5027,28	TC4S30F	IC	2	
IC5030-33	TC4S30F	IC	4	
IC5034	XC62DN5002P	IC	1	
IC5035	TC4S71F	IC	1	
IC5040-43	TC4S30F	IC	4	
IC5045	TC4S71F	IC	1	
IC5050	UPC5102GS030	IC	1	
IC5060	UPC5102GS030	IC	1	
L5300,01	VLQ0163J2R2	COIL 2.2UH	2	
L5350,51	VLQ0163J2R2	COIL 2.2UH	2	
L5400,01	VLQ0163J330	COIL 33UH	2	
L5500,01	VLQ0163J330	COIL 33UH	2	
P5001	VJS3375B060	CONNECTOR (FEMALE)	1	
P5002	VJS3900C013	CONNECTOR (FEMALE)	1	
P5003	VJS3900C010	CONNECTOR (FEMALE)	1	
Q5200,01	2SA1022-C	TRANSISTOR	2	
Q5300	2SD601A-R	TRANSISTOR	1	
Q5301	2SB709A-R	TRANSISTOR	1	
Q5302,03	2SC3735B35	TRANSISTOR	2	
Q5350	2SD601A-R	TRANSISTOR	1	
Q5351	2SB709A-R	TRANSISTOR	1	
Q5352,53	2SC3735B35	TRANSISTOR	2	
Q5400	2SA1022-C	TRANSISTOR	1	
Q5401-04	2SD1979	TRANSISTOR	4	
Q5405,06	2SC2954	TRANSISTOR	2	
Q5407,08	2SC3130	TRANSISTOR	2	
Q5409	2SC2954	TRANSISTOR	1	
Q5410,11	2SA1022-C	TRANSISTOR	2	
Q5412,13	2SK508-B	TRANSISTOR	2	
Q5500	2SA1022-C	TRANSISTOR	1	
Q5501-04	2SD1979	TRANSISTOR	4	
Q5505,06	2SC2954	TRANSISTOR	2	
Q5507,08	2SC3130	TRANSISTOR	2	
Q5509	2SC2954	TRANSISTOR	1	
Q5510,11	2SA1022-C	TRANSISTOR	2	
Q5512,13	2SK508-B	TRANSISTOR	2	
Q5600,01	XN5531	TRANSISTOR-RESISTOR	2	
Q5700,01	XN5531	TRANSISTOR-RESISTOR	2	
R5100	ERJ6GEYG682	M.REISITOR CH 1/10W 6.8K	1	
R5101,02	ERJ6GEYG153	M.RESISTOR CH 1/10W 15K	2	
R5103	ERJ6GEYG682	M.REISITOR CH 1/10W 6.8K	1	
R5104,05	ERJ6GEYG153	M.RESISTOR CH 1/10W 15K	2	
R5106-09	ERJ6GEYG103	M.RESISTOR CH 1/10W 10K	4	
R5200,01	ERJ6GEYG103	M.RESISTOR CH 1/10W 10K	2	
R5202	ERJ6GEYG392	M.RESISTOR CH 1/10W 3.9K	1	
R5203,04	ERJ6GEYG103	M.RESISTOR CH 1/10W 10K	2	
R5205	ERJ6GEYG562	M.RESISTOR CH 1/10W 5.6K	1	
R5206	ERJ6GEYG392	M.RESISTOR CH 1/10W 3.9K	1	
R5207,08	ERJ6GEYG103	M.RESISTOR CH 1/10W 10K	2	
R5209	ERJ6GEYG392	M.RESISTOR CH 1/10W 3.9K	1	
R5210,11	ERJ6GEYG103	M.RESISTOR CH 1/10W 10K	2	
R5212	ERJ6GEYG562	M.RESISTOR CH 1/10W 5.6K	1	
R5213	ERJ6GEYG392	M.RESISTOR CH 1/10W 3.9K	1	
R5214	ERJ6GEYG221	M.RESISTOR CH 1/10W 220	1	
R5215,16	ERJ6GEYG471	M.RESISTOR CH 1/10W 470	2	
R5217	ERJ6GEYG102	M.RESISTOR CH 1/10W 1K	1	
R5218	ERJ6GEYG221	M.RESISTOR CH 1/10W 220	1	

Ref.No.	Part No.	Part Name & Description	Pcs	Remarks
R5219,20	ERJ6GEYG471	M.RESISTOR CH 1/10W 470	2	
R5221	ERJ6GEYG102	M.RESISTOR CH 1/10W 1K	1	
R5300	ERJ6GEYG154	M.RESISTOR CH 1/10W 150K	1	
R5302	ERJ6GEYF472	M.RESISTOR CH 1/10W 4.7K	1	
R5303	ERJ6GEYG103	M.RESISTOR CH 1/10W 10K	1	
R5304	ERJ6GEYG222	M.RESISTOR CH 1/10W 2.2K	1	
R5305	ERJ6GEYG392	M.RESISTOR CH 1/10W 3.9K	1	
R5306	ERJ6GEYJ100	M.RESISTOR CH 1/10W 10	1	
R5307	ERJ6GEYF472	M.RESISTOR CH 1/10W 4.7K	1	
R5308	ERJ6GEYG122	M.RESISTOR CH 1/10W 1.2K	1	
R5309,10	ERJ8GCYG101	M.RESISTOR CH 1/8W 100	2	
R5311	ERJ6GEYF472	M.RESISTOR CH 1/10W 4.7K	1	
R5312	ERJ6GEYG122	M.RESISTOR CH 1/10W 1.2K	1	
R5313	ERJ8GCYJ270	M.RESISTOR CH 1/8W 27	1	
R5314	ERJ6GEYG563	M.RESISTOR CH 1/10W 56K	1	
R5350	ERJ6GEYG154	M.RESISTOR CH 1/10W 150K	1	
R5352	ERJ6GEYF472	M.RESISTOR CH 1/10W 4.7K	1	
R5353	ERJ6GEYG103	M.RESISTOR CH 1/10W 10K	1	
R5354	ERJ6GEYG222	M.RESISTOR CH 1/10W 2.2K	1	
R5355	ERJ6GEYG392	M.RESISTOR CH 1/10W 3.9K	1	
R5356	ERJ6GEYJ100	M.RESISTOR CH 1/10W 10	1	
R5357	ERJ6GEYF472	M.RESISTOR CH 1/10W 4.7K	1	
R5358	ERJ6GEYG122	M.RESISTOR CH 1/10W 1.2K	1	
R5359,60	ERJ8GCYG101	M.RESISTOR CH 1/8W 100	2	
R5361	ERJ6GEYF472	M.RESISTOR CH 1/10W 4.7K	1	
R5362	ERJ6GEYG122	M.RESISTOR CH 1/10W 1.2K	1	
R5363	ERJ8GCYJ270	M.RESISTOR CH 1/8W 27	1	
R5364	ERJ6GEYG563	M.RESISTOR CH 1/10W 56K	1	
R5400,01	ERJ6GEYF123	M.RESISTOR CH 1/10W 12K	2	
R5402-04	ERJ6GEYG103	M.RESISTOR CH 1/10W 10K	3	
R5405-08	ERJ6GEYG222	M.RESISTOR CH 1/10W 2.2K	4	
R5409-13	ERJ6GEYG152	M.RESISTOR CH 1/10W 1.5K	5	
R5414	ERJ6GEYG103	M.RESISTOR CH 1/10W 10K	1	
R5415	ERJ8GCYJ221	M.RESISTOR CH 1/8W 220	1	
R5416	ERJ6GEYG103	M.RESISTOR CH 1/10W 10K	1	
R5417	ERJ6GEYG152	M.RESISTOR CH 1/10W 1.5K	1	
R5419	ERJ6GEYG470	M.RESISTOR CH 1/10W 47	1	
R5420,21	ERJ6GEYG272	M.RESISTOR CH 1/10W 2.7K	2	
R5424,25	ERJ6GEYG330	M.RESISTOR CH 1/10W 33	2	
R5426	ERJ6GEYG821	M.RESISTOR CH 1/10W 820	1	
R5427	ERJ6GEYG151	M.RESISTOR CH 1/10W 150	1	
R5428	ERJ6GEYG821	M.RESISTOR CH 1/10W 820	1	
R5429	ERJ6GEYG151	M.RESISTOR CH 1/10W 150	1	
R5430	ERJ12YJ270	M.RESISTOR CH 1/2W 270	1	
R5431	ERJ6GEYG104	M.RESISTOR CH 1/10W 100K	1	
R5432,33	ERJ6GEYG182	M.RESISTOR CH 1/10W 1.8K	2	
R5434	ERJ6GEYF472	M.RESISTOR CH 1/10W 4.7K	1	
R5435	ERJ6GEYG103	M.RESISTOR CH 1/10W 10K	1	
R5440	ERJ6GEYG103	M.RESISTOR CH 1/10W 10K	1	
R5500,01	ERJ6GEYF123	M.RESISTOR CH 1/10W 12K	2	
R5502-04	ERJ6GEYG103	M.RESISTOR CH 1/10W 10K	3	
R5505-08	ERJ6GEYG222	M.RESISTOR CH 1/10W 2.2K	4	
R5509-13	ERJ6GEYG152	M.RESISTOR CH 1/10W 1.5K	5	
R5514	ERJ6GEYG103	M.RESISTOR CH 1/10W 10K	1	
R5515	ERJ8GCYJ221	M.RESISTOR CH 1/8W 220	1	
R5516	ERJ6GEYG103	M.RESISTOR CH 1/10W 10K	1	
R5517	ERJ6GEYG152	M.RESISTOR CH 1/10W 1.5K	1	
R5519	ERJ6GEYG470	M.RESISTOR CH 1/10W 47	1	
R5520,21	ERJ6GEYG272	M.RESISTOR CH 1/10W 2.7K	2	
R5524,25	ERJ6GEYG330	M.RESISTOR CH 1/10W 33	2	
R5526	ERJ6GEYG821	M.RESISTOR CH 1/10W 820	1	
R5527	ERJ6GEYG151	M.RESISTOR CH 1/10W 150	1	
R5528	ERJ6GEYG821	M.RESISTOR CH 1/10W 820	1	
R5529	ERJ6GEYG151	M.RESISTOR CH 1/10W 150	1	
R5530	ERJ12YJ270	M.RESISTOR CH 1/2W 270	1	
R5531	ERJ6GEYG104	M.RESISTOR CH 1/10W 100K	1	
R5532,33	ERJ6GEYG182	M.RESISTOR CH 1/10W 1.8K	2	
R5534	ERJ6GEYF472	M.RESISTOR CH 1/10W 4.7K	1	
R5535	ERJ6GEYG103	M.RESISTOR CH 1/10W 10K	1	
R5540	ERJ6GEYG103	M.RESISTOR CH 1/10W 10K	1	
R5600	ERJ6GEYJ100	M.RESISTOR CH 1/10W 10	1	
R5601,02	ERJ6GEYG470	M.RESISTOR CH 1/10W 47	2	
R5603,04	ERJ6GEYG391	M.RESISTOR CH 1/10W 390	2	
R5605,06	ERJ6GEYG222	M.RESISTOR CH 1/10W 2.2K	2	
R5607,08	ERJ6GEYG470	M.RESISTOR CH 1/10W 47	2	

Ref.No.	Part No.	Part Name & Description	Pcs	Remarks
R5609,10	ERJ6GEYG102	M.RESISTOR CH 1/10W 1K	2	
R5611,12	ERJ6GEYG101	M.RESISTOR CH 1/10W 100	2	
R5613,14	ERJ6GEYG330	M.RESISTOR CH 1/10W 33	2	
R5615-18	ERJ6GEY0R00	M.RESISTOR CH 1/10W 0	4	
R5700	ERJ6GEYJ100	M.RESISTOR CH 1/10W 10	1	
R5701,02	ERJ6GEYG470	M.RESISTOR CH 1/10W 47	2	
R5703,04	ERJ6GEYG121	M.RESISTOR CH 1/10W 120	2	
R5705	ERJ6GEYG222	M.RESISTOR CH 1/10W 2.2K	1	
R5706	ERJ6GEYG153	M.RESISTOR CH 1/10W 15K	1	
R5707,08	ERJ6GEYG470	M.RESISTOR CH 1/10W 47	2	
R5709,10	ERJ6GEYG102	M.RESISTOR CH 1/10W 1K	2	
R5711,12	ERJ6GEYG101	M.RESISTOR CH 1/10W 100	2	
R5713,14	ERJ6GEYG330	M.RESISTOR CH 1/10W 33	2	
R5715-18	ERJ6GEY0R00	M.RESISTOR CH 1/10W 0	4	
TG5001,02	VJR0646	TEST POINT	2	
TP5001-04	VJR0646	TEST POINT	4	
		MISCELLANEOUS		
	VMP5846	RF HOLDER ANGLE	1	
	VYQ1745	RF SHIELD CASE (UPPER)	1	
	VSC4386	RF SHIELD CASE (MIDDLE)	1	
	XTV3+6FFR	SCREW	2	
	VSC4437	RF SHIELD CASE (LOWER)	1	
	VMZ2588	RF BARRIER	1	
	VEE9862	GND CABLE	1	
■E13	VEP80991A	AC HEAD I/F P.C.BOARD	1	(RTL)
P1	VJP2278	CONNECTOR (MALE)	1	
P2	VJP1881T	CONNECTOR (MALE)	1	
■E14	VEP83224A	V/S JACK P.C.BOARD	1	(RTL)
C1,C2	ECUM1E104ZFN	C.CAPACITOR CH 25V 0.1U	2	
C4	ECA1CXS470	E.CAPACITOR 16V 47U	1	
C5,C6	ECUM1E104ZFN	C.CAPACITOR CH 25V 0.1U	2	
C8	ECA1CXS470	E.CAPACITOR 16V 47U	1	
C9,10	ECUM1E104ZFN	C.CAPACITOR CH 25V 0.1U	2	
C11	ECUX1H270JCV	C.CAPACITOR CH 50V 27P	1	
C12,13	ECUM1E104ZFN	C.CAPACITOR CH 25V 0.1U	2	
C14	ECUX1H270JCV	C.CAPACITOR CH 50V 27P	1	
C15,16	ECUM1E104ZFN	C.CAPACITOR CH 25V 0.1U	2	
C17	ECUX1H270JCV	C.CAPACITOR CH 50V 27P	1	
C18,19	ECUM1E104ZFN	C.CAPACITOR CH 25V 0.1U	2	
C20	ECUX1H270JCV	C.CAPACITOR CH 50V 27P	1	
C21,22	ECUM1E104ZFN	C.CAPACITOR CH 25V 0.1U	2	
C23	ECUX1H270JCV	C.CAPACITOR CH 50V 27P	1	
C24,25	ECUM1E104ZFN	C.CAPACITOR CH 25V 0.1U	2	
C26	ECUX1H270JCV	C.CAPACITOR CH 50V 27P	1	
C27	ECUM1E104ZFN	C.CAPACITOR CH 25V 0.1U	1	
C28,29	ECA1CXS470	E.CAPACITOR 16V 47U	2	
C30	ECUM1E104ZFN	C.CAPACITOR CH 25V 0.1U	1	
C31,32	ECA1CXS470	E.CAPACITOR 16V 47U	2	
C33-38	ECUM1H101JCN	C.CAPACITOR CH 50V 100P	6	
C50,51	ECUM1E104ZFN	C.CAPACITOR CH 25V 0.1U	2	
C203	ECUM1H331JCN	C.CAPACITOR CH 50V 330P	1	
C204-27	ECUX1H102JCN	C.CAPACITOR CH 50V 1000P	24	
C240-42	ECA1CXS100	E.CAPACITOR 16V 10U	3	
C243	ECA1CXS470	E.CAPACITOR 16V 47U	1	
C244	ECUM1E104ZFN	C.CAPACITOR CH 25V 0.1U	1	
C250-57	ECUM1E104ZFN	C.CAPACITOR CH 25V 0.1U	8	
D1-D5	MA152K	DIODE	5	
D6-11	MA3130-L	DIODE	6	
D201,02	MA152K	DIODE	2	
IC1	NJM78L09UA	IC	1	
IC2	NJM79L09UA	IC	1	

Ref.No.	Part No.	Part Name & Description	Pcs	Remarks
IC3	NJM78L09UA	IC	1	
IC4	NJM79L09UA	IC	1	
IC5	NJM78L09UA	IC	1	
IC6	NJM79L09UA	IC	1	
IC201,02	MC14021BF	IC	2	
IC203	SN74S1051NS	IC	1	
IC205,06	MC14094BF	IC	2	
IC207	MC14050BF	IC	1	
IC208	MC14049UBF	IC	1	
IC209	NJM78L09UA	IC	1	
IC210	NJM79L09UA	IC	1	
J1,J2	VJS3902	CONNECTOR (FEMALE)	2	
J3	VJS3901	CONNECTOR (FEMALE)	1	
J4,J5	VJS3902	CONNECTOR (FEMALE)	2	
J14,15	VJP3414A009	CONNECTOR (MALE)	2	
J16	VJP3414A015	CONNECTOR (MALE)	1	
J17,18	VJP3414A025	CONNECTOR (MALE)	2	
L1	VLQEL05F101J	COIL 100UH	1	
P1	VJP3375A060	CONNECTOR (MALE)	1	
Q1	2SA1022-C	TRANSISTOR	1	
Q2	2SC2295-C	TRANSISTOR	1	
Q3	2SA1022-C	TRANSISTOR	1	
Q4	2SC2295-C	TRANSISTOR	1	
Q5	2SA1022-C	TRANSISTOR	1	
Q6	2SC2295-C	TRANSISTOR	1	
Q7	2SA1022-C	TRANSISTOR	1	
Q8	2SC2295-C	TRANSISTOR	1	
Q9	2SA1022-C	TRANSISTOR	1	
Q10	2SC2295-C	TRANSISTOR	1	
Q11	2SB709A-R	TRANSISTOR	1	
Q12,13	2SD601A-R	TRANSISTOR	2	
Q14	2SB709A-R	TRANSISTOR	1	
Q15,16	2SD601A-R	TRANSISTOR	2	
Q17	2SB709A-R	TRANSISTOR	1	
Q18,19	2SD601A-R	TRANSISTOR	2	
Q20	2SB709A-R	TRANSISTOR	1	
Q21,22	2SD601A-R	TRANSISTOR	2	
Q23	2SB709A-R	TRANSISTOR	1	
Q24,25	2SD601A-R	TRANSISTOR	2	
Q26	2SB709A-R	TRANSISTOR	1	
Q27,28	2SD601A-R	TRANSISTOR	2	
Q201-12	UN2214	TRANSISTOR-RESISTOR	12	
R1	ERJ6RED750	M.RESISTOR CH 1/10W 75	1	
R2	ERJ6GEYG470	M.RESISTOR CH 1/10W 47	1	
R3	ERJ6GEYJ334	M.RESISTOR CH 1/10W 330K	1	
R4	ERJ6GEYG332	M.RESISTOR CH 1/10W 3.3K	1	
R5,R6	ERJ6GEYG470	M.RESISTOR CH 1/10W 47	2	
R7	ERJ6GEYG102	M.RESISTOR CH 1/10W 1K	1	
R8	ERJ6GEYG330	M.RESISTOR CH 1/10W 33	1	
R9	ERJ6RED750	M.RESISTOR CH 1/10W 75	1	
R10	ERJ6GEYG470	M.RESISTOR CH 1/10W 47	1	
R11	ERJ6GEYJ334	M.RESISTOR CH 1/10W 330K	1	
R12	ERJ6GEYG332	M.RESISTOR CH 1/10W 3.3K	1	
R13,14	ERJ6GEYG470	M.RESISTOR CH 1/10W 47	2	
R15	ERJ6GEYG102	M.RESISTOR CH 1/10W 1K	1	
R16	ERJ6GEYG330	M.RESISTOR CH 1/10W 33	1	
R17	ERJ6RED750	M.RESISTOR CH 1/10W 75	1	
R18	ERJ6GEYG470	M.RESISTOR CH 1/10W 47	1	
R19	ERJ6GEYJ334	M.RESISTOR CH 1/10W 330K	1	
R20	ERJ6GEYG332	M.RESISTOR CH 1/10W 3.3K	1	
R21,22	ERJ6GEYG470	M.RESISTOR CH 1/10W 47	2	
R23	ERJ6GEYG102	M.RESISTOR CH 1/10W 1K	1	
R24	ERJ6GEYG330	M.RESISTOR CH 1/10W 33	1	
R25	ERJ6RED750	M.RESISTOR CH 1/10W 75	1	
R26	ERJ6GEYG470	M.RESISTOR CH 1/10W 47	1	
R27	ERJ6GEYJ334	M.RESISTOR CH 1/10W 330K	1	
R28	ERJ6GEYG332	M.RESISTOR CH 1/10W 3.3K	1	
R29,30	ERJ6GEYG470	M.RESISTOR CH 1/10W 47	2	
R31	ERJ6GEYG102	M.RESISTOR CH 1/10W 1K	1	
R32	ERJ6GEYG330	M.RESISTOR CH 1/10W 33	1	

Ref.No.	Part No.	Part Name & Description	Pcs	Remarks
R33	ERJ6RED750	M.RESISTOR CH 1/10W 75	1	
R34	ERJ6GEYG470	M.RESISTOR CH 1/10W 47	1	
R35	ERJ6GEYJ334	M.RESISTOR CH 1/10W 330K	1	
R36	ERJ6GEYG332	M.RESISTOR CH 1/10W 3.3K	1	
R37,38	ERJ6GEYG470	M.RESISTOR CH 1/10W 47	2	
R39	ERJ6GEYG102	M.RESISTOR CH 1/10W 1K	1	
R40	ERJ6GEYG330	M.RESISTOR CH 1/10W 33	1	
R41,42	ERJ6GEYG222	M.RESISTOR CH 1/10W 2.2K	2	
R43	ERJ6GEYG470	M.RESISTOR CH 1/10W 47	1	
R44	ERJ6GEYG222	M.RESISTOR CH 1/10W 2.2K	1	
R45,46	ERJ6GEYG221	M.RESISTOR CH 1/10W 220	2	
R47	ERJ6RED750	M.RESISTOR CH 1/10W 75	1	
R48-50	ERJ6GEYG222	M.RESISTOR CH 1/10W 2.2K	3	
R51	ERJ6GEYG470	M.RESISTOR CH 1/10W 47	1	
R52	ERJ6GEYG222	M.RESISTOR CH 1/10W 2.2K	1	
R53,54	ERJ6GEYG221	M.RESISTOR CH 1/10W 220	2	
R55	ERJ6RED750	M.RESISTOR CH 1/10W 75	1	
R56-58	ERJ6GEYG222	M.RESISTOR CH 1/10W 2.2K	3	
R59	ERJ6GEYG470	M.RESISTOR CH 1/10W 47	1	
R60	ERJ6GEYG222	M.RESISTOR CH 1/10W 2.2K	1	
R61,62	ERJ6GEYG221	M.RESISTOR CH 1/10W 220	2	
R63	ERJ6RED750	M.RESISTOR CH 1/10W 75	1	
R64-66	ERJ6GEYG222	M.RESISTOR CH 1/10W 2.2K	3	
R67	ERJ6GEYG470	M.RESISTOR CH 1/10W 47	1	
R68	ERJ6GEYG222	M.RESISTOR CH 1/10W 2.2K	1	
R69,70	ERJ6GEYG221	M.RESISTOR CH 1/10W 220	2	
R71	ERJ6RED750	M.RESISTOR CH 1/10W 75	1	
R72-74	ERJ6GEYG222	M.RESISTOR CH 1/10W 2.2K	3	
R75	ERJ6GEYG470	M.RESISTOR CH 1/10W 47	1	
R76	ERJ6GEYG222	M.RESISTOR CH 1/10W 2.2K	1	
R77,78	ERJ6GEYG221	M.RESISTOR CH 1/10W 220	2	
R79	ERJ6RED750	M.RESISTOR CH 1/10W 75	1	
R80-82	ERJ6GEYG222	M.RESISTOR CH 1/10W 2.2K	3	
R83	ERJ6GEYG470	M.RESISTOR CH 1/10W 47	1	
R84	ERJ6GEYG222	M.RESISTOR CH 1/10W 2.2K	1	
R85,86	ERJ6GEYG221	M.RESISTOR CH 1/10W 220	2	
R87	ERJ6RED750	M.RESISTOR CH 1/10W 75	1	
R88	ERJ6GEYG222	M.RESISTOR CH 1/10W 2.2K	1	
R201,02	ERJ6GEYG682	M.REISITOR CH 1/10W 6.8K	2	
R203	ERJ6GEYG103	M.RESISTOR CH 1/10W 10K	1	
R204	ERJ6GEYG474	M.RESISTOR CH 1/10W 470K	1	
R205	ERJ6GEYG103	M.RESISTOR CH 1/10W 10K	1	
R206	ERJ6GEYG474	M.RESISTOR CH 1/10W 470K	1	
R207	ERJ6GEYG223	M.RESISTOR CH 1/10W 22K	1	
R208	ERJ6GEYG101	M.RESISTOR CH 1/10W 100	1	
R209-32	ERJ6GEYG103	M.RESISTOR CH 1/10W 10K	24	
R241	ERJ6GEYG103	M.RESISTOR CH 1/10W 10K	1	
R242	ERJ6GEYG474	M.RESISTOR CH 1/10W 470K	1	
R243	ERJ6GEYF473	M.RESISTOR CH 1/10W 47K	1	
▪ R244	ERQ12HJ2R7	F.RESISTOR 1/2W 2.7	1	
R251-55	ERJ6GEYG122	M.RESISTOR CH 1/10W 1.2K	5	
SW1,W2	VSS0307	SWITCH	2	
		MISCELLANEOUS		
	VMP5684	P.C.BOARD ANGLE	1	
	VMP4866	D SUB ANGLE	1	
	VXQ0102	SCREW	10	
	XTN26+6FFZ	SCREW	4	
	XTN3+10JFZ	SCREW	5	
	XYE3+EF8	SCREW	2	
■ E15	VEP81183A	POWER 1 P.C.BOARD	1	(RTL)
▪ C1101	ECQU2A224MV	P.CAPACITOR 100V 0.22U	1	
▪ C1102,03	VCK0262K471A	C.CAPACITOR 470P	2	
▪ C1104	ECQU2A474MV	P.CAPACITOR 100V 0.47U	1	
▪ C1105,06	VCK0262K101A	C.CAPACITOR 100P	2	
▪ C1107,08	VCK0260M152A	C.CAPACITOR 1500P	2	
▪ C1109	VCK0260M102A	C.CAPACITOR 1000P	1	
C1110,11	ECUM1H104ZFN	C.CAPACITOR CH 50V 0.1U	2	
C1112	VCK0293	C.CAPACITOR	1	

Ref.No.	Part No.	Part Name & Description	Pcs	Remarks
C1115,16	VCK0106K471	C.CAPACITOR 470P	2	
C1117,18	ECEC2WC151EB	E.CAPACITOR 450V 150U	2	
C1119,20	VCK0106K471	C.CAPACITOR 470P	2	
C1121	ECA1HXLV100	E.CAPACITOR 50V 10U	1	
C1122	ECA1HXS100	E.CAPACITOR 50V 10U	1	
C1124,25	ECUM1E474ZFM	C.CAPACITOR CH 25V 0.47U	2	
C1126	ECUM1H102KBN	C.CAPACITOR CH 50V 1000P	1	
C1127	ECQV1H684JF	P.CAPACITOR 50V 0.68U	1	
C1128	ECA1HFQ101	E.CAPACITOR 50V 100U	1	
C1129	ECUM1H103KBN	C.CAPACITOR CH 50V 0.01U	1	
C1130	ECUM1H104ZFN	C.CAPACITOR CH 50V 0.1U	1	
C1131	ECQF6222JZ	P.CAPACITOR 630V 2200P	1	
C1132,33	ECUM1H104ZFN	C.CAPACITOR CH 50V 0.1U	2	
C1134	ECUM1H472KBN	C.CAPACITOR CH 50V 4700P	1	
D1101	RBV606	DIODE	1	
D1102	TM1661S-L	DIODE	1	
D1103	U1GU44	DIODE	1	
D1104	FML-36S	DIODE	1	
D1105,06	ERA15-08	DIODE	2	
D1107,08	MA3200-M	DIODE	2	
D1110	MA151K	DIODE	1	
D1111-13	U1GU44	DIODE	3	
D1114,15	MA3068-M	DIODE	2	
D1116	MA3200-M	DIODE	1	
D1117	MA151K	DIODE	1	
IC1101	MC33262P	IC	1	
IC1102	M51945BL	IC	1	
IC1103	M51953BL	IC	1	
▪ L1101	ELF18D850C	FILTER	1	
▪ L1102,03	ELF18D604F	FILTER	2	
L1105	VLQ0820	COIL	1	
P1101	VJP2638	CONNECTOR (MALE)	1	
P1102,03	VJP2639	CONNECTOR (MALE)	2	
P1104	VJP4033	CONNECTOR (MALE)	1	
Q1101,02	2SK1941-01R	TRANSISTOR	2	
Q1105	UN2213	TRANSISTOR-RESISTOR	1	
▪ R1101	ERC12AGM334	S.RESISTOR 1/2W 330K	1	
▪ R1102,03	ERU5TEJ100	F.RESISTOR 5W 10	2	
R1104	ERJ6GEYG103	M.RESISTOR CH 1/10W 10K	1	
R1105,06	ERG2SJ220	M.RESISTOR 2W 22	2	
R1107	VRE0206	M.RESISTOR	1	
R1108	ERJ14YJ100	M.RESISTOR CH 1/4W 10	1	
R1109	ERJ14YJ220	M.RESISTOR CH 1/4W 22	1	
R1110	ERJ14YJ100	M.RESISTOR CH 1/4W 10	1	
R1111	ERJ14YJ220	M.RESISTOR CH 1/4W 22	1	
R1112	ERJ14YJ100	M.RESISTOR CH 1/4W 10	1	
R1113	ERJ12YJ473	M.RESISTOR CH 1/2W 47K	1	
R1114	ERJ6GEYF123	M.RESISTOR CH 1/10W 12K	1	
R1115,16	ERJ6GEYG221	M.RESISTOR CH 1/10W 220	2	
R1117,18	ERG3SJ333	M.RESISTOR 3W 33K	2	
R1119	ERJ6RBD273	M.RESISTOR CH 1/10W 27K	1	
R1120	ERJ6RBD183	M.RESISTOR CH 1/10W 18K	1	
R1122	ERJ12YJ473	M.RESISTOR CH 1/2W 47K	1	
R1123	ERJ14YJ474	M.RESISTOR CH 1/4W 470K	1	
R1125	ERJ6GEY0R00	M.RESISTOR CH 1/10W 0	1	
R1127	ERJ6GEY0R00	M.RESISTOR CH 1/10W 0	1	
R1129	ERJ14YJ474	M.RESISTOR CH 1/4W 470K	1	
R1130	ERJ6GEYG103	M.RESISTOR CH 1/10W 10K	1	
R1131	ERJ6GEYG221	M.RESISTOR CH 1/10W 220	1	
R1132	ERJ6GEYG470	M.RESISTOR CH 1/10W 47	1	
R1133	ERJ6GEYG390	M.RESISTOR CH 1/10W 39	1	
R1134,35	ERJ14YJ224	M.RESISTOR CH 1/4W 220K	2	
R1136	ERJ14YJ154	M.RESISTOR CH 1/4W 150K	1	
R1137	ERJ6RBD103	M.RESISTOR CH 1/10W 10K	1	
R1138	ERJ6GEYF472	M.RESISTOR CH 1/10W 4.7K	1	
R1139-41	ERJ12YJ154	M.RESISTOR CH 1/2W 150K	3	
R1142	ERJ6RBD272	M.RESISTOR CH 1/10W 2.7K	1	
R1143,44	ERJ12YJ224	M.RESISTOR CH 1/2W 220K	2	
R1145	ERJ6GEYG103	M.RESISTOR CH 1/10W 10K	1	

Ref.No.	Part No.	Part Name & Description	Pcs	Remarks
R1146	VRT0142	THERMISTOR	1	
R1147	ERG2SJ471	M.RESISTOR 2W 470	1	
R1148-50	ERJ12YJ154	M.RESISTOR CH 1/2W 150K	3	
R1151	ERJ6RBD223	M.RESISTOR CH 1/10W 22K	1	
R1153,54	ERJ12YJ473	M.RESISTOR CH 1/2W 47K	2	
R1155,56	ERJ6GEYG103	M.RESISTOR CH 1/10W 10K	2	
R1158	ERJ6GEY0R00	M.RESISTOR CH 1/10W 0	1	
R1159	ERJ6GEYG104	M.RESISTOR CH 1/10W 100K	1	
R1160	ERJ6RED224	M.RESISTOR CH 1/10W 220K	1	
R1161	ERJ6RBD104	M.RESISTOR CH 1/10W 100K	1	
R1162	ERJ6RED334	M.RESISTOR CH 1/10W 330K	1	
R1163	ERJ6GEYG474	M.RESISTOR CH 1/10W 470K	1	
R1165	ERJ6GEYG273	M.RESISTOR CH 1/10W 27K	1	
R1166	ERJ6GEYG102	M.RESISTOR CH 1/10W 1K	1	
VR1102	VRV0109B501	V.RESISTOR 500	1	
		MISCELLANEOUS		
▪	VMZ0965	CAPACITOR COVER	3	
▪	VMZ1608	CAPACITOR COVER	4	
	VSC4708	HEAT SINK (A)	1	
	XYE3+EF8	SCREW	2	
	XYN3+F6FZS	SCREW	1	
	XYN3+F8	SCREW	5	
	XYN3+F10	SCREW	1	
	VJR1008	EARTH LUG	3	
■ E16	VEP81184B	POWER 2 P.C.BOARD	1	(RTL)
C1002,03	ECUM1H222KBN	C.CAPACITOR CH 50V 2200P	2	
C1004-07	ECUM1H104ZFN	C.CAPACITOR CH 50V 0.1U	4	
C1008	ECUM1H222KBN	C.CAPACITOR CH 50V 2200P	1	
C1009,10	ECA1HXLV220	E.CAPACITOR 50V 22U	2	
C1011	ECA1HXLV010	E.CAPACITOR 50V 1U	1	
C1012	ECUM1H332KBN	C.CAPACITOR CH 50V 3300P	1	
C1013	ECA1HXLV010	E.CAPACITOR 50V 1U	1	
C1015	ECUM1H332KBN	C.CAPACITOR CH 50V 3300P	1	
C1016	ECHU1H471GB	P.CAPACITOR 50V 470P	1	
C1017	ECUM1H104KBN	C.CAPACITOR CH 50V 0.1U	1	
C1018	ECUM1E104KBM	C.CAPACITOR CH 25V 0.1U	1	
C1019	ECUM1H562KBN	C.CAPACITOR CH 50V 5600P	1	
C1020	ECUM1H104KBN	C.CAPACITOR CH 50V 0.1U	1	
C1021	ECHU1H471GB	P.CAPACITOR 50V 470P	1	
C1022	ECUM1H562KBN	C.CAPACITOR CH 50V 5600P	1	
C1023	ECUM1E104KBM	C.CAPACITOR CH 25V 0.1U	1	
C1024	ECUM1H104ZFN	C.CAPACITOR CH 50V 0.1U	1	
C1026	ECUM1E474ZFM	C.CAPACITOR CH 25V 0.47U	1	
C1027,28	ECUM1H104ZFN	C.CAPACITOR CH 50V 0.1U	2	
C1040,41	EEUFA1A332LE	E.CAPACITOR 10V 3300U	2	
C1042	EEUFA1V471E	E.CAPACITOR 35V 470U	1	
C1043	EEUFA1E332E	E.CAPACITOR 25V 3300U	1	
C1044,45	EEUFA1C222LE	E.CAPACITOR 16V 2200P	2	
C1046	EEUFA1E681E	E.CAPACITOR 25V 680P	1	
C1047,48	ECA1CXL101	E.CAPACITOR 16V 100U	2	
C1049	ECA1VHG471	E.CAPACITOR 35V 100U	1	
C1050	ECA1EXLV101	E.CAPACITOR 25V 100U	1	
C1051-53	ECA1CXL101	E.CAPACITOR 16V 100U	3	
C1054	ECUM1E104KBM	C.CAPACITOR CH 25V 0.1U	1	
C1055	ECUM1H104ZFN	C.CAPACITOR CH 50V 0.1U	1	
C1056	ECUM1E104KBM	C.CAPACITOR CH 25V 0.1U	1	
C1059	ECUM1H104ZFN	C.CAPACITOR CH 50V 0.1U	1	
C1060	ECUM1H121JCN	C.CAPACITOR CH 50V 120P	1	
C1062	VCK0106K151	C.CAPACITOR 150P	1	
C1063	ECA1VXLV470	E.CAPACITOR 35V 47U	1	
C1065	VCK0106K151	C.CAPACITOR 150P	1	
C1066	ECA1VXLV470	E.CAPACITOR 35V 47U	1	
C1067,68	ECQE6473KF	P.CAPACITOR 630V 0.047U	2	
C1069-75	ECKD2H101KB	C.CAPACITOR 500V 100P	7	
C1076-78	EEUFA1A822E	E.CAPACITOR 10V 8200P	3	
C1079	ECUM1H121JCN	C.CAPACITOR CH 50V 120P	1	
C1080,81	ECUM1H222KBN	C.CAPACITOR CH 50V 2200P	2	
C1083	ECUM1H104ZFN	C.CAPACITOR CH 50V 0.1U	1	

Ref.No.	Part No.	Part Name & Description	Pcs	Remarks
C1085	EEUFA1C222LE	E.CAPACITOR 16V 2200P	1	
C1086	ECUM1H102KBN	C.CAPACITOR CH 50V 1000P	1	
C1087	ECUM1H104ZFN	C.CAPACITOR CH 50V 0.1U	1	
C1088	EEUFA1A822E	E.CAPACITOR 10V 8200P	1	
C1089	ECA1HXS100	E.CAPACITOR 50V 10U	1	
C1090-93	ECUM1H104ZFN	C.CAPACITOR CH 50V 0.1U	4	
C1094	ECUM1H102KBN	C.CAPACITOR CH 50V 1000P	1	
C1095	ECUM1E474ZFM	C.CAPACITOR CH 25V 0.47U	1	
C1096	ECA1CXL101	E.CAPACITOR 16V 100U	1	
C1097,98	ECUM1E474ZFM	C.CAPACITOR CH 25V 0.47U	2	
C1099	ECUM1H104ZFN	C.CAPACITOR CH 50V 0.1U	1	
D1001	MA151WK	DIODE	1	
D1004	MA151K	DIODE	1	
D1005	MA151WK	DIODE	1	
D1007	MA3082-H	DIODE	1	
D1008	MA3051-M	DIODE	1	
D1009	MA153	DIODE	1	
D1010	U1GU44	DIODE	1	
D1011	MA151K	DIODE	1	
D1012	MA3240-H	DIODE	1	
D1013,14	U1GU44	DIODE	2	
D1015	MA3240-H	DIODE	1	
D1017	U1GU44	DIODE	1	
D1018,19	MA3051-M	DIODE	2	
D1020-22	MA151K	DIODE	3	
D1023,24	MA3051-M	DIODE	2	
D1030	D30SC4M	DIODE	1	
D1031	FML-G12SP	DIODE	1	
D1032	RL4ZP	DIODE	1	
D1033,34	FML-G12SP	DIODE	2	
D1035	FMB-G14L	DIODE	1	
D1036	FML-G12SP	DIODE	1	
D1037,38	MA3075-M	DIODE	2	
D1039	MA3240-H	DIODE	1	
D1040	MA3160-L	DIODE	1	
D1041,42	MA3130-L	DIODE	2	
D1043	MA3160-L	DIODE	1	
D1044,45	U05NU44	DIODE	2	
D1046	EG01C	DIODE	1	
D1047	U1GU44	DIODE	1	
D1048	MA3240-H	DIODE	1	
D1049	EG01C	DIODE	1	
D1050	U1GU44	DIODE	1	
D1051	MA3240-H	DIODE	1	
D1052	MA151K	DIODE	1	
IC1001,02	FA5311BP	IC	2	
IC1011,12	UPC1093J	IC	2	
IC1013	UPC393C	IC	1	
IC1014	PQ30RV31	IC	1	
J1001	VWJ0121	CABLE	1	
L1012	VLQ0479	COIL	1	
L1013	VLQ0605	COIL	1	
L1014	VLQ0655K220	COIL 22UH	1	
L1015,16	VLQ0605	COIL	2	
L1017	VLQ0354	COIL	1	
L1018	VLQ0655K220	COIL 22UH	1	
L1019	VLP0074	COIL	1	
L1021,22	VLP0074	COIL	2	
P1011	VJP2824B003	CONNECTOR (MALE)	1	
P1012	VJP2824B009	CONNECTOR (MALE)	1	
P1013	VJP2824B008	CONNECTOR (MALE)	1	
P1014	VJP1243T	CONNECTOR (MALE) 3P	1	
P1015	VJP4033	CONNECTOR (MALE)	1	
Q1002,03	2SD1478-R	TRANSISTOR	2	
Q1004	2SB710-R	TRANSISTOR	1	
Q1005	UN2213	TRANSISTOR-RESISTOR	1	
Q1006,07	2SB709-R	TRANSISTOR	2	
Q1011,12	2SK2258-01	TRANSISTOR	2	
▪ Q1013-15	PS2561L1V1WL	TRANSISTOR	3	

Ref.No.	Part No.	Part Name & Description	Pcs	Remarks
Q1017	UN2214	TRANSISTOR-RESISTOR	1	
Q1018	UN2211	TRANSISTOR-RESISTOR	1	
Q1019	UN2111	TRANSISTOR-RESISTOR	1	
▪ Q1020	PS2561L1V1WL	TRANSISTOR	1	
Q1022	UN2113	TRANSISTOR-RESISTOR	1	
Q1023	UN2213	TRANSISTOR-RESISTOR	1	
Q1024	UN2214	TRANSISTOR-RESISTOR	1	
R1001-05	ERJ6GEYG121	M.RESISTOR CH 1/10W 120	5	
R1006	ERG2SJ681	M.RESISTOR 2W 680	1	
R1007,08	ERJ6GEYG105	M.RESISTOR CH 1/10W 1M	2	
R1009	ERJ14YJ4R7	M.RESISTOR CH 1/4W 4.7	1	
R1010	ERJ6GEYG104	M.RESISTOR CH 1/10W 100K	1	
R1011	ERJ6RBD241	M.RESISTOR CH 1/10W 240	1	
R1012,13	ERJ6GEYG104	M.RESISTOR CH 1/10W 100K	2	
R1014	ERJ6GEYG154	M.RESISTOR CH 1/10W 150K	1	
R1016	ERJ14YJ4R7	M.RESISTOR CH 1/4W 4.7	1	
R1017	ERJ6RBD241	M.RESISTOR CH 1/10W 240	1	
R1018,19	ERJ6GEYJ225	M.RESISTOR CH 1/10W 2.2M	2	
R1020	ERJ14YJ100	M.RESISTOR CH 1/4W 10	1	
R1021	ERG3SJ333	M.RESISTOR 3W 33K	1	
R1023,24	ERJ12YJ154	M.RESISTOR CH 1/2W 150K	2	
R1026	ERJ6GEYG683	M.RESISTOR CH 1/10W 68K	1	
R1027	ERJ6GEYG563	M.RESISTOR CH 1/10W 56K	1	
R1028	ERJ6RBD472	M.RESISTOR CH 1/10W 4.7K	1	
R1029	ERJ6GEYG221	M.RESISTOR CH 1/10W 220	1	
R1030	ERJ6RBD471	M.RESISTOR CH 1/10W 470	1	
R1031	ERJ14YJ100	M.RESISTOR CH 1/4W 10	1	
R1033,34	ERJ12YJ154	M.RESISTOR CH 1/2W 150K	2	
R1036	ERJ6GEYG104	M.RESISTOR CH 1/10W 100K	1	
R1037	ERJ6RBD472	M.RESISTOR CH 1/10W 4.7K	1	
R1038	ERJ6GEYG471	M.RESISTOR CH 1/10W 470	1	
R1039	ERJ6RBD681	M.RESISTOR CH 1/10W 680	1	
R1040,41	ERJ6GEYG121	M.RESISTOR CH 1/10W 120	2	
R1042	ERJ6GEYJ334	M.RESISTOR CH 1/10W 330K	1	
R1043	ERJ6RBD621	M.RESISTOR CH 1/10W 620	1	
R1044	ERJ6RBD391	M.RESISTOR CH 1/10W 390	1	
R1046,47	ERJ6GEYJ334	M.RESISTOR CH 1/10W 330K	2	
R1048,49	ERJ6GEYF473	M.RESISTOR CH 1/10W 47K	2	
R1050	ERG2SJ470	M.RESISTOR 2W 47	1	
R1051,52	ERJ6GEYG183	M.RESISTOR CH 1/10W 18K	2	
R1053	ERJ6RBD182	M.RESISTOR CH 1/10W 1.8K	1	
R1054	ERG2SJ470	M.RESISTOR 2W 47	1	
R1055	VRT0142	THERMISTOR	1	
R1056	ERJ6GEYG331	M.RESISTOR CH 1/10W 330	1	
R1057	ERJ6GEYG103	M.RESISTOR CH 1/10W 10K	1	
R1058	ERJ6RBD362	M.RESISTOR CH 1/10W 3.6K	1	
R1059	ERJ6RBD471	M.RESISTOR CH 1/10W 470	1	
R1060	ERJ6GEYG103	M.RESISTOR CH 1/10W 10K	1	
R1061	ERJ6GEYG104	M.RESISTOR CH 1/10W 100K	1	
R1062	VRT0033	THERMISTOR	1	
R1063	ERJ6GEYG221	M.RESISTOR CH 1/10W 220	1	
R1064,65	ERG2SJ681	M.RESISTOR 2W 680	2	
R1066	ERJ6GEYG331	M.RESISTOR CH 1/10W 330	1	
R1067	ERJ6GEYG121	M.RESISTOR CH 1/10W 120	1	
R1068	ERJ6GEYG103	M.RESISTOR CH 1/10W 10K	1	
R1069	ERJ6RBD682	M.RESISTOR CH 1/10W 6.8K	1	
R1070	ERJ6RBD162	M.RESISTOR CH 1/10W 1.6K	1	
R1071	ERJ6GEYG103	M.RESISTOR CH 1/10W 10K	1	
R1072	ERG3SJ333	M.RESISTOR 3W 33K	1	
R1073	ERG2SJ180	M.RESISTOR 2W 18	1	
R1074	ERJ14YJ390	M.RESISTOR 1/4W 39	1	
R1075	ERJ6GEYG104	M.RESISTOR CH 1/10W 100K	1	
R1076	ERW1PKR33	W.RESISTOR 1W 0.33	1	
R1077	ERG3SJ333	M.RESISTOR 3W 33K	1	
R1078	ERG2SJ180	M.RESISTOR 2W 18	1	
R1079	ERJ14YJ220	M.RESISTOR CH 1/4W 22	1	
R1080	ERJ6GEYG104	M.RESISTOR CH 1/10W 100K	1	
R1081	ERW1PKR33	W.RESISTOR 1W 0.33	1	
R1082,83	ERJ6RBD103	M.RESISTOR CH 1/10W 10K	2	
R1084	ERJ6RBD132	M.RESISTOR CH 1/10W 1.3K	1	
R1085,86	ERJ6RBD103	M.RESISTOR CH 1/10W 10K	2	
R1087	ERJ6GEYG103	M.RESISTOR CH 1/10W 10K	1	
R1088	VRE0206	M.RESISTOR	1	
R1089	ERJ14YJ154	M.RESISTOR CH 1/4W 150K	1	

Ref.No.	Part No.	Part Name & Description	Pcs	Remarks
R1090	ERJ6RBD122	M.RESISTOR CH 1/10W 1.2K	1	
R1091,92	ERJ6RBD103	M.RESISTOR CH 1/10W 10K	2	
R1093,94	ERJ6GEYG103	M.RESISTOR CH 1/10W 10K	2	
R1095	ERX2SZJR10	M.RESISTOR 2W 0.1	1	
R1097	ERJ6GEYG223	M.RESISTOR CH 1/10W 22K	1	
R1098	ERJ6GEYG103	M.RESISTOR CH 1/10W 10K	1	
R1099	ERG3SJ333	M.RESISTOR 3W 33K	1	
▪ T1001	VLT0899	TRANSFORMER	1	
▪ T1002	VLT0900	TRANSFORMER	1	
VR1001,02	VRV0112B501	V.RESISTOR 500	2	
		MISCELLANEOUS		
	VLP0394	FERRITE BEAD	8	
	VLP0337	AMORPHOUS BEAD	2	
	VLP0394	FERRITE BEAD	3	
	VSC4779	HEAT SINK (E)	1	
	VSC4778	HEAT SINK (F)	1	
	XYN3+F8	SCREW	13	
	XYN3+F6	SCREW	2	
	VJR1008	EARTH LUG	2	
	XYN3+F10	SCREW	2	
	XYE3+EF8	SCREW	4	
	VSC4707	HEAT SINK	1	
	VMZ2779	INSULATION	1	
	VEE0C18	GND CABLE	1	
	VSC4780	HEAT SINK (D)	1	
	VMZ2919	SHEET	2	
■ E17	VEP80A58A	POWER INT P.C.BOARD	1	(RTL)
		MISCELLANEOUS		
	VJS4033	CONNECTOR	2	
■ E18	VEP84183A	A JACK P.C.BOARD	1	(RTL)
C1,C2	ECUM1H103ZFN	C.CAPACITOR CH 50V 0.01U	2	
C5-C8	ECUM1H103ZFN	C.CAPACITOR CH 50V 0.01U	4	
C11-14	ECUM1H103ZFN	C.CAPACITOR CH 50V 0.01U	4	
J1,J2	VJS3417	CONNECTOR (FEMALE)	2	
J5,J6	VJS3417	CONNECTOR (FEMALE)	2	
J7,J8	VJP3417	CONNECTOR (MALE)	2	
J11-14	VJP3417	CONNECTOR (MALE)	4	
P1	VJP3375A060	CONNECTOR (MALE)	1	
R1	ERJ6GEYG122	M.RESISTOR CH 1/10W 1.2K	1	
R3	ERJ6GEYG122	M.RESISTOR CH 1/10W 1.2K	1	
R5	ERJ6GEYG122	M.RESISTOR CH 1/10W 1.2K	1	
R7	ERJ6GEYG122	M.RESISTOR CH 1/10W 1.2K	1	
R17	ERJ6GEYG122	M.RESISTOR CH 1/10W 1.2K	1	
R19	ERJ6GEYG122	M.RESISTOR CH 1/10W 1.2K	1	
R21	ERJ6GEYG122	M.RESISTOR CH 1/10W 1.2K	1	
R23	ERJ6GEYG122	M.RESISTOR CH 1/10W 1.2K	1	
R25	ERJ6GEYG122	M.RESISTOR CH 1/10W 1.2K	1	
R27	ERJ6GEYG122	M.RESISTOR CH 1/10W 1.2K	1	
R29	ERJ6GEYG122	M.RESISTOR CH 1/10W 1.2K	1	
R31	ERJ6GEYG122	M.RESISTOR CH 1/10W 1.2K	1	
R41	ERJ6GEYG122	M.RESISTOR CH 1/10W 1.2K	1	
R43	ERJ6GEYG122	M.RESISTOR CH 1/10W 1.2K	1	
R45	ERJ6GEYG122	M.RESISTOR CH 1/10W 1.2K	1	
R47	ERJ6GEYG122	M.RESISTOR CH 1/10W 1.2K	1	
R49	ERJ6GEYG122	M.RESISTOR CH 1/10W 1.2K	1	
R51	ERJ6GEYG122	M.RESISTOR CH 1/10W 1.2K	1	
R53	ERJ6GEYG122	M.RESISTOR CH 1/10W 1.2K	1	
R55	ERJ6GEYG122	M.RESISTOR CH 1/10W 1.2K	1	

Ref.No.	Part No.	Part Name & Description	Pcs	Remarks
		MISCELLANEOUS		
	VMP4867	XLR GUIDE ANGLE (A)	1	
	XYN26+F8	SCREW	2	
■ E19	VEP84187A	AES/EBU P.C.BOARD	1	(RTL)
J1	VJS3417	CONNECTOR (FEMALE)	1	
J2	VJP3417	CONNECTOR (MALE)	1	
P1	VJP1246T	CONNECTOR (MALE) 6P	1	
■ E20	VEP80A76A	UP FRONT 1 P.C.BOARD	1	(RTL)
C1	ECUM1H331JCN	C.CAPACITOR CH 50V 330P	1	
C2-C5	ECUM1E104ZFN	C.CAPACITOR CH 25V 0.1U	4	
C6	ECA1CXS100	E.CAPACITOR 16V 10U	1	
D1-15	LN31GPHL	LED	15	
D16	LN41YPHL	LED	1	
D17	LN81RCPHL	LED	1	
D18	LN31GPHL	LED	1	
D19,20	MA152K	DIODE	2	
D21	LN31GPHL	LED	1	
IC1	MC14050BF	IC	1	
IC2	MC14049UBF	IC	1	
IC3,C4	MC14094BF	IC	2	
P1	VJP1248T	CONNECTOR (MALE) 8P	1	
P2	VJP1246T	CONNECTOR (MALE) 6P	1	
Q1-13	2SD601A-R	TRANSISTOR	13	
R1,R2	ERJ6GEYG682	M.REISITOR CH 1/10W 6.8K	2	
R3,R4	ERJ6GEYG103	M.RESISTOR CH 1/10W 10K	2	
R5,R6	ERJ6GEYG474	M.RESISTOR CH 1/10W 470K	2	
R7	ERJ6GEYG223	M.RESISTOR CH 1/10W 22K	1	
R8	ERJ6GEYG103	M.RESISTOR CH 1/10W 10K	1	
R9	ERJ6GEYG474	M.RESISTOR CH 1/10W 470K	1	
R10	ERJ6GEYF473	M.RESISTOR CH 1/10W 47K	1	
R11	ERJ6GEYG103	M.RESISTOR CH 1/10W 10K	1	
R12	ERJ6GEYF473	M.RESISTOR CH 1/10W 47K	1	
R13,14	ERJ6GEYG181	M.RESISTOR CH 1/10W 180	2	
R15	ERJ6GEYG103	M.RESISTOR CH 1/10W 10K	1	
R16	ERJ6GEYF473	M.RESISTOR CH 1/10W 47K	1	
R17,18	ERJ6GEYG181	M.RESISTOR CH 1/10W 180	2	
R19	ERJ6GEYG103	M.RESISTOR CH 1/10W 10K	1	
R20	ERJ6GEYF473	M.RESISTOR CH 1/10W 47K	1	
R21,22	ERJ6GEYG181	M.RESISTOR CH 1/10W 180	2	
R23	ERJ6GEYG103	M.RESISTOR CH 1/10W 10K	1	
R24	ERJ6GEYF473	M.RESISTOR CH 1/10W 47K	1	
R25,26	ERJ6GEYG181	M.RESISTOR CH 1/10W 180	2	
R27	ERJ6GEYG103	M.RESISTOR CH 1/10W 10K	1	
R28	ERJ6GEYF473	M.RESISTOR CH 1/10W 47K	1	
R29,30	ERJ6GEYG181	M.RESISTOR CH 1/10W 180	2	
R31	ERJ6GEYG103	M.RESISTOR CH 1/10W 10K	1	
R32	ERJ6GEYF473	M.RESISTOR CH 1/10W 47K	1	
R33,34	ERJ6GEYG181	M.RESISTOR CH 1/10W 180	2	
R35,36	ERJ6GEYG103	M.RESISTOR CH 1/10W 10K	2	
R37,38	ERJ6GEYG181	M.RESISTOR CH 1/10W 180	2	
R39	ERJ6GEYG103	M.RESISTOR CH 1/10W 10K	1	
R40	ERJ6GEYF473	M.RESISTOR CH 1/10W 47K	1	
R41	ERJ6GEYG181	M.RESISTOR CH 1/10W 180	1	
R42	ERJ6GEYG103	M.RESISTOR CH 1/10W 10K	1	
R43	ERJ6GEYF473	M.RESISTOR CH 1/10W 47K	1	
R44	ERJ6GEYG181	M.RESISTOR CH 1/10W 180	1	
R45	ERJ6GEYG103	M.RESISTOR CH 1/10W 10K	1	
R46	ERJ6GEYF473	M.RESISTOR CH 1/10W 47K	1	
R47	ERJ6GEYG181	M.RESISTOR CH 1/10W 180	1	
R48,49	ERJ6GEYG103	M.RESISTOR CH 1/10W 10K	2	

Ref.No.	Part No.	Part Name & Description	Pcs	Remarks
R50	ERJ6GEYG181	M.RESISTOR CH 1/10W 180	1	
R51	ERJ6GEYG103	M.RESISTOR CH 1/10W 10K	1	
R52	ERJ6GEYF473	M.RESISTOR CH 1/10W 47K	1	
R53	ERJ6GEYG181	M.RESISTOR CH 1/10W 180	1	
R54	ERJ6GEYG103	M.RESISTOR CH 1/10W 10K	1	
R55	ERJ6GEYF473	M.RESISTOR CH 1/10W 47K	1	
R56-58	ERJ6GEYG181	M.RESISTOR CH 1/10W 180	3	
SW1	EVQQS205K	SWITCH	1	
SW2	EVQQS307K	SWITCH	1	
		MISCELLANEOUS		
	VGQ2507	LED SPACER	19	
■E21	VEP80852A	UP FRONT 2 P.C.BOARD	1	(RTL)
D1	VLL0029	LED	1	
P1	VJP1246T	CONNECTOR (MALE) 6P	1	
SW1	VSP0864C001	SWITCH	1	
■E22	VEP86263B	FRONT CPU P.C.BOARD	1	(RTL)
C1	ECUM1H103KBN	C.CAPACITOR CH 50V 0.01U	1	
C2	ECEV1HV2R2Q	E.CAPACITOR CH 50V 2.2U	1	
C3	ECUM1H103KBN	C.CAPACITOR CH 50V 0.01U	1	
C4,C5	ECUM1H100DCN	C.CAPACITOR CH 50V 10P	2	
C6	ECUM1E104ZFN	C.CAPACITOR CH 25V 0.1U	1	
C7-14	ECUM1H103KBN	C.CAPACITOR CH 50V 0.01U	8	
C15	ECUM1E104ZFN	C.CAPACITOR CH 25V 0.1U	1	
C16,17	ECUM1H103KBN	C.CAPACITOR CH 50V 0.01U	2	
C20,21	ECEV1CV470Q	E.CAPACITOR CH 16V 47U	2	
C22-25	ECUX1E104KBN	C.CAPACITOR CH 25V 0.1U	4	
C26,27	ECEV1CV470Q	E.CAPACITOR CH 16V 47U	2	
C28-37	ECUM1H103KBN	C.CAPACITOR CH 50V 0.01U	10	
C38,39	ECEV1CV470Q	E.CAPACITOR CH 16V 47U	2	
C40-42	ECUM1E104ZFN	C.CAPACITOR CH 25V 0.1U	3	
C43-47	ECUM1H103KBN	C.CAPACITOR CH 50V 0.01U	5	
C48-51	ECUM1E104ZFN	C.CAPACITOR CH 25V 0.1U	4	
C52-69	ECUM1H103KBN	C.CAPACITOR CH 50V 0.01U	18	
C70	ERJ6GEY0R00	M.RESISTOR CH 1/10W 0	1	
C71	ECUM1H103KBN	C.CAPACITOR CH 50V 0.01U	1	
C72	ERJ6GEY0R00	M.RESISTOR CH 1/10W 0	1	
C73-75	ECUM1H103KBN	C.CAPACITOR CH 50V 0.01U	3	
C76	ERJ6GEY0R00	M.RESISTOR CH 1/10W 0	1	
C77,78	ECUM1H103KBN	C.CAPACITOR CH 50V 0.01U	2	
C79	ERJ6GEY0R00	M.RESISTOR CH 1/10W 0	1	
C80-82	ECUM1H103KBN	C.CAPACITOR CH 50V 0.01U	3	
C84-86	ECUM1H221JCN	C.CAPACITOR CH 50V 220P	3	
C88,89	ECUM1H103KBN	C.CAPACITOR CH 50V 0.01U	2	
D1-D8	MA152WK	DIODE	8	
DP1	VEQ1847	DISPLAY TUBE	1	
FL1-L4	VLF1016A470	FILTER	4	
IC1	HD64180ZRP10	IC	1	
IC2	VSI2687	IC	1	
IC3	K6256DLG7L	IC	1	
IC4	TL7705CPSB	IC	1	
IC5	74F32SJ	IC	1	
IC6	MC74HC161AF	IC	1	
IC13	MC74HC04AF	IC	1	
IC14	TE7751	IC	1	
IC15	MC74HC138AF	IC	1	
IC16	MC74HC32AF	IC	1	
IC17	SN75C1168NS	IC	1	
IC18	MC74HC4538AF	IC	1	

Ref.No.	Part No.	Part Name & Description	Pcs	Remarks
IC20,21	NJM78L05UA	IC	2	
IC22	MC14015BF	IC	1	
IC23	UPC339G2	IC	1	
IC24	MC74HC04AF	IC	1	
IC25	MC74HC11F	IC	1	
IC26	MC14013BF	IC	1	
IC27	UPD71055GB	IC	1	
IC28,29	MC14516BF	IC	2	
IC30	TLC549IPS	IC	1	
IC31	MC74HC4051F	IC	1	
IC32	TLC549IPS	IC	1	
IC33	MC74HC4051F	IC	1	
IC34-41	NJM2904M	IC	8	
IC42	MC74HC11F	IC	1	
IC43	MC74HC32AF	IC	1	
IS2	VJS2336A032	CONNECTOR (FEMALE)	1	
L1,L2	VLP0133	COIL	2	
P1,P2	VJP1942T	CONNECTOR (MALE)	2	
P3,P4	VJP3440A016	CONNECTOR (MALE)	2	
P5	VJP2891A016	CONNECTOR (MALE)	1	
P6	VJS3281A020	CONNECTOR (FEMALE)	1	
P7	VJS2698A028	CONNECTOR (FEMALE)	1	
P8	VJP1233T	CONNECTOR (MALE) 6P	1	
R1	ERJ6GEYG222	M.RESISTOR CH 1/10W 2.2K	1	
R2-R7	ERJ6GEYF473	M.RESISTOR CH 1/10W 47K	6	
R8-15	ERJ6GEYG103	M.RESISTOR CH 1/10W 10K	8	
R16	ERJ6GEYG222	M.RESISTOR CH 1/10W 2.2K	1	
R17	ERJ6GEYG181	M.RESISTOR CH 1/10W 180	1	
R18,19	ERJ6GEYG103	M.RESISTOR CH 1/10W 10K	2	
R20	ERJ6GEYF473	M.RESISTOR CH 1/10W 47K	1	
R21-36	ERJ6GEYG103	M.RESISTOR CH 1/10W 10K	16	
R37-41	ERJ6GEYF473	M.RESISTOR CH 1/10W 47K	5	
R42,43	ERJ6GEYF472	M.RESISTOR CH 1/10W 4.7K	2	
R44	ERJ6GEYG101	M.RESISTOR CH 1/10W 100	1	
R45-47	ERJ6GEYF472	M.RESISTOR CH 1/10W 4.7K	3	
R48	ERJ6GEYG102	M.RESISTOR CH 1/10W 1K	1	
R49,50	ERJ6GEYF472	M.RESISTOR CH 1/10W 4.7K	2	
R51-54	ERJ6GEYG563	M.RESISTOR CH 1/10W 56K	4	
R55-58	ERJ6GEYG103	M.RESISTOR CH 1/10W 10K	4	
R59-63	ERJ6GEYF472	M.RESISTOR CH 1/10W 4.7K	5	
R64	ERJ6GEYG103	M.RESISTOR CH 1/10W 10K	1	
R65-69	ERJ6GEYF472	M.RESISTOR CH 1/10W 4.7K	5	
R70-98	ERJ6GEYG103	M.RESISTOR CH 1/10W 10K	29	
R99,00	ERJ6GEY0R00	M.RESISTOR CH 1/10W 0	2	
R101-04	ERJ6GEYG392	M.RESISTOR CH 1/10W 3.9K	4	
R105-07	ERJ6GEY0R00	M.RESISTOR CH 1/10W 0	3	
R128,29	ERJ6GEY0R00	M.RESISTOR CH 1/10W 0	2	
R131-56	ERJ6GEYG103	M.RESISTOR CH 1/10W 10K	26	
R157	ERJ6GEY0R00	M.RESISTOR CH 1/10W 0	1	
R158-65	ERJ6GEYG102	M.RESISTOR CH 1/10W 1K	8	
R200,01	ERDS2TJ121	C.RESISTOR 1/4W 120	2	
SW1	VSS0184	SWITCH	1	
X1	VSX0641	CRYSTAL OSCILLATOR	1	
		MISCELLANEOUS		
	VMX2507	SPACER	2	
	XYN3+K8	SCREW	2	
■E23	VEP86148A	FRONT CPU SUB P.C.BOARD	1	(RTL)
P1	VJS3406B028	CONNECTOR (FEMALE)	1	
R2-R5	ERJ6GEYG101	M.RESISTOR CH 1/10W 100	4	
SW1-10	VSS0391	SWITCH	10	
SW11-13	VSP1013	SWITCH	3	

Ref.No.	Part No.	Part Name & Description	Pcs	Remarks
VR2-R5	VRV0273	V.RESISTOR	4	
■E24	VEP80A49B	FRONT SW P.C.BOARD	1	(RTL)
C1	ECUM1E104ZFN	C.CAPACITOR CH 25V 0.1U	1	
C4,C5	ECUM1H103KBN	C.CAPACITOR CH 50V 0.01U	2	
C7-11	ECUM1H103KBN	C.CAPACITOR CH 50V 0.01U	5	
C13	ECEA0JGE102	E.CAPACITOR 6.3V 1000U	1	
C14	ECUM1H103KBN	C.CAPACITOR CH 50V 0.01U	1	
C16	ECEV1HV4R7Q	E.CAPACITOR CH 50V 4.7U	1	
C17	ECUX1H333KBN	C.CAPACITOR CH 50V 0.033U	1	
C18	ECUM1H103KBN	C.CAPACITOR CH 50V 0.01U	1	
C19	ECEA1AGE331	E.CAPACITOR 10V 330U	1	
C20	ECEA1HGE470	E.CAPACITOR 50V 47U	1	
C30,31	ECUM1H103KBN	C.CAPACITOR CH 50V 0.01U	2	
D2-D5	LN38GCPP	LED	4	
D6	LN28RCPP	LED	1	
D7	LN38GCPP	LED	1	
D8	LN48YCPP	LED	1	
D9	LN38GCPP	LED	1	
D10	LN48YCPP	LED	1	
D12	LN48YCPP	LED	1	
D13-16	LN38GCPP	LED	4	
D17-25	MA152WA	DIODE	9	
D26,27	MA152A	DIODE	2	
D28-38	MA152WA	DIODE	11	
D39	MA152A	DIODE	1	
D40	MA152WA	DIODE	1	
D44	MA4300	DIODE	1	
D45	MA166	DIODE	1	
D46	MA701A	DIODE	1	
D47	MA4030M	DIODE	1	
DP1	VSL0462	DISPLAY TUBE	1	
F1	EYP2BN135	FUSE	1	
IC1	UPD71055GB	IC	1	
IC2,C3	MC74HC138AF	IC	2	
IC5-C9	MC74HC273AF	IC	5	
IC11	UPD16310GF	IC	1	
P1,P2	VJP1986T	CONNECTOR (MALE)	2	
Q45,46	2SC1815Y	TRANSISTOR	2	
Q47	2SC3074Y	TRANSISTOR	1	
Q48-53	2SB709A-R	TRANSISTOR	6	
QR1-40	UN2214	TRANSISTOR-RESISTOR	40	
R4-11	ERJ6GEYG181	M.RESISTOR CH 1/10W 180	8	
R12-14	ERJ6GEYG221	M.RESISTOR CH 1/10W 220	3	
R15-19	ERJ6GEYG181	M.RESISTOR CH 1/10W 180	5	
R20-26	ERJ6GEYG221	M.RESISTOR CH 1/10W 220	7	
R27-29	ERJ6GEYG181	M.RESISTOR CH 1/10W 180	3	
R30-34	ERJ6GEYG221	M.RESISTOR CH 1/10W 220	5	
R35-42	ERJ6GEYG181	M.RESISTOR CH 1/10W 180	8	
R43-50	ERJ6GEYF472	M.RESISTOR CH 1/10W 4.7K	8	
R51-53	ERJ6GEY0R00	M.RESISTOR CH 1/10W 0	3	
R110	ERJ6GEYG103	M.RESISTOR CH 1/10W 10K	1	
R111	ERDS2TJ682	C.RESISTOR 1/4W 6.8K	1	
R112	ERDS2TJ101	C.RESISTOR 1/4W 100	1	
R113	ERDS2TJ221	C.RESISTOR 1/4W 220	1	
R114	ERDS2TJ220	C.RESISTOR 1/4W 22	1	
R115	ERJ8GCYJ103	M.RESISTOR CH 1/8W 10K	1	
R120	ERJ6GEYF473	M.RESISTOR CH 1/10W 47K	1	
R121-28	ERJ6GEYG103	M.RESISTOR CH 1/10W 10K	8	
R129-40	ERJ6GEYG223	M.RESISTOR CH 1/10W 22K	12	
R141	ERJ6GEYG181	M.RESISTOR CH 1/10W 180	1	
R142	ERJ6GEYF472	M.RESISTOR CH 1/10W 4.7K	1	
R143-45	ERJ6GEYG103	M.RESISTOR CH 1/10W 10K	3	

Ref.No.	Part No.	Part Name & Description	Pcs	Remarks
SW1	VSP0791	SWITCH	1	
SW2	VSP0788	SWITCH	1	
SW3	VSP0792	SWITCH	1	
SW4	VSP0789	SWITCH	1	
SW5	VSP0790	SWITCH	1	
SW6,W7	VSP0795	SWITCH	2	
SW8-10	VSP0864A000	SWITCH	3	
SW11,12	VSP0795	SWITCH	2	
SW13	VSP0998	SWITCH	1	
SW14	VSP0864A039	SWITCH	1	
SW15	VSP0999A001	SWITCH	1	
SW16	VSP0864A038	SWITCH	1	
SW18	VSP0853A000	SWITCH	1	
SW20-24	VSP0853A000	SWITCH	5	
SW25	VSP0997A002	SWITCH	1	
SW26	VSP0997A001	SWITCH	1	
SW27-31	VSS0226	SWITCH	5	
SW32	VSP1005	SWITCH	1	
SW34	VSP1005	SWITCH	1	
SW36-41	VSP1005	SWITCH	6	
SW42	VSP0864A048	SWITCH	1	
SW43	VSP0864A049	SWITCH	1	
TR1	VLT0869	TRANSFORMER	1	
		MISCELLANEOUS		
	VJF1258	HOLDER	1	
	VMX2147	SPACER	14	
■E25	VEP80963C	FRONT VR 1 P.C.BOARD	1	(RTL)
P1	VJP3440A016	CONNECTOR (MALE)	1	
R1,R2	ERDS2TJ101	C.RESISTOR 1/4W 100	2	
R4,R5	ERDS2TJ101	C.RESISTOR 1/4W 100	2	
R6	ERDS2TJ220	C.RESISTOR 1/4W 22	1	
VR1,R2	EVU023003B14	V.RESISTOR 10K	2	
VR4,R5	EVU023003B14	V.RESISTOR 10K	2	
VR6	EWVBB6018B14	V.RESISTOR 10K	1	
		MISCELLANEOUS		
	VEE8380	FRONT VR1 CABLE	1	
■E26	VEP80964C	FRONT VR 2 P.C.BOARD	1	(RTL)
FL1-L3	VLF1356	FILTER	3	
J1	VJJ0378	M6 JACK	1	
P1	VJP3440A016	CONNECTOR (MALE)	1	
R1,R2	ERDS2TJ101	C.RESISTOR 1/4W 100	2	
R4	ERDS2TJ101	C.RESISTOR 1/4W 100	1	
VR1,R2	EVU023006B14	V.RESISTOR 10K	2	
VR4	EVU023006B14	V.RESISTOR 10K	1	
		MISCELLANEOUS		
	VEE9639	FRONT VR CABLE	1	
	VEE4187	EARTH LUG	1	
	VMC1321	EARTH METAL	1	

Ref.No.	Part No.	Part Name & Description	Pcs	Remarks
■E27	VEP82216B	MECHA I/F P.C.BOARD	1	(RTL)
C1	ECUX1H561JCV	C.CAPACITOR CH 50V 560P	1	
C2-C5	ECUX1H103KBV	C.CAPACITOR CH 50V 0.01U	4	
C6	ECEV1CV220Q	E.CAPACITOR CH 16V 22U	1	
C7	ECUX1H103KBV	C.CAPACITOR CH 50V 0.01U	1	
C8	ECEV1CV470Q	E.CAPACITOR CH 16V 47U	1	
C9,10	ECUX1E104ZFV	C.CAPACITOR CH 25V 0.1U	2	
C11	ECUX1H103KBV	C.CAPACITOR CH 50V 0.01U	1	
C12	ECUX1E104ZFV	C.CAPACITOR CH 25V 0.1U	1	
C13,14	ECEV1CV470Q	E.CAPACITOR CH 16V 47U	2	
C15	ECUX1H103KBV	C.CAPACITOR CH 50V 0.01U	1	
C20	ECUX1H103KBV	C.CAPACITOR CH 50V 0.01U	1	
C21	ECUX1E104ZFV	C.CAPACITOR CH 25V 0.1U	1	
C22	ECUX1H103KBV	C.CAPACITOR CH 50V 0.01U	1	
C23	ECUX1E104ZFV	C.CAPACITOR CH 25V 0.1U	1	
C100	ECUX1E104ZFV	C.CAPACITOR CH 25V 0.1U	1	
C101	ECEV1CV470Q	E.CAPACITOR CH 16V 47U	1	
C102	ECA1HEN101	E.CAPACITOR 50V 100U	1	
C103	ECUX1H103KBV	C.CAPACITOR CH 50V 0.01U	1	
C104	ECEV1CV100Q	E.CAPACITOR CH 16V 10U	1	
C200-02	ECUX1H101JCV	C.CAPACITOR CH 50V 100P	3	
D1	MA157	DIODE	1	
D100-02	MA738	DIODE	3	
IC1,C2	0P177GS	IC	2	
IC3	NJM4580ED	IC	1	
IC4-C6	UPC4558G2	IC	3	
IC10	NJM78L09UA	IC	1	
IC11	NJM79L09UA	IC	1	
IC100	MC14538BF	IC	1	
L1,L2	VLF1016A470	FILTER	2	
L100	VLP0133	COIL	1	
P1	VJP2891A030	CONNECTOR (MALE)	1	
P2	VJP3418A080	CONNECTOR (MALE)	1	
P11	VJP3172D002	CONNECTOR (MALE)	1	
P12	VJP3172D005	CONNECTOR (MALE)	1	
P13	VJP3172D002	CONNECTOR (MALE)	1	
P14	VJP3172D003	CONNECTOR (MALE)	1	
P15	VJP3518B002	CONNECTOR (MALE)	1	
P16	VJP3518B003	CONNECTOR (MALE)	1	
P17	VJS3801B010	CONNECTOR (FEMALE)	1	
P18	VJP3518B002	CONNECTOR (MALE)	1	
P19	VJP3172D002	CONNECTOR (MALE)	1	
P20	VJP3518B003	CONNECTOR (MALE)	1	
P21	VJP3518B002	CONNECTOR (MALE)	1	
P22	VJP3172D004	CONNECTOR (MALE)	1	
P24	VJP3518B002	CONNECTOR (MALE)	1	
P25	VJP1230T	CONNECTOR (MALE) 3P	1	
P26	VJP1236T	CONNECTOR (MALE) 9P	1	
P30	VJP3172D003	CONNECTOR (MALE)	1	
P32	VJP3172D004	CONNECTOR (MALE)	1	
P33	VJS3406B015	CONNECTOR (FEMALE)	1	
P34,35	VJS2889A017	CONNECTOR (FEMALE)	2	
P36	VJS3406B019	CONNECTOR (FEMALE)	1	
P41	VJP3172D002	CONNECTOR (MALE)	1	
P48	VJP3125B002	CONNECTOR (MALE)	1	
Q1	2SB1218A-R	TRANSISTOR	1	
Q100,01	2SB766-R	TRANSISTOR	2	
QR100,01	UN2214	TRANSISTOR-RESISTOR	2	
R1	ERJ3GEYJ821	M.RESISTOR CH 1/16W 820	1	
R2,R3	ERJ3GEYJ562	M.RESISTOR CH 1/16W 5.6K	2	
R4	ERJ3RBD562	M.RESISTOR CH 1/16W 5.6K	1	
R5	ERJ3RBD473	M.RESISTOR CH 1/16W 47K	1	
R6	ERJ3RBD562	M.RESISTOR CH 1/16W 5.6K	1	
R7	ERJ3GEYJ562	M.RESISTOR CH 1/16W 5.6K	1	
R8	ERJ3RBD333	M.RESISTOR CH 1/16W 33K	1	
R9	ERJ3GEYJ562	M.RESISTOR CH 1/16W 5.6K	1	
R10	ERJ3RBD562	M.RESISTOR CH 1/16W 5.6K	1	
R11	ERJ3RBD473	M.RESISTOR CH 1/16W 47K	1	
R12,13	ERJ6RBD103	M.RESISTOR CH 1/10W 10K	2	

Ref.No.	Part No.	Part Name & Description	Pcs	Remarks
R14	ERJ6RBD104	M.RESISTOR CH 1/10W 100K	1	
R15	ERJ6RBD823	M.RESISTOR CH 1/10W 82K	1	
R16	ERJ6RBD273	M.RESISTOR CH 1/10W 27K	1	
R17	ERJ3GEYJ273	M.RESISTOR CH 1/16W 27K	1	
R18	ERJ6RBD392	M.RESISTOR CH 1/10W 3.9K	1	
R19	ERJ6RBD103	M.RESISTOR CH 1/10W 10K	1	
R20	ERJ3GEYG102	M.RESISTOR CH 1/16W 1K	1	
R21	ERJ6RBD183	M.RESISTOR CH 1/10W 18K	1	
R22	ERJ6RBD473	M.RESISTOR CH 1/10W 47K	1	
R23	ERJ6RBD682	M.RESISTOR CH 1/10W 6.8K	1	
R24	ERJ6RBD222	M.RESISTOR CH 1/10W 2.2K	1	
R25	ERJ6RBD391	M.RESISTOR CH 1/10W 390	1	
R36,37	ERJ3GEY0R00	M.RESISTOR CH 1/16W 0	2	
R100	ERJ3GEYJ223	M.RESISTOR CH 1/16W 22K	1	
R101	ERJ8GCYJ102	M.RESISTOR CH 1/8W 1K	1	
R102	ERJ6GEYG102	M.RESISTOR CH 1/10W 1K	1	
R103	ERJ3GEYJ334	M.RESISTOR CH 1/16W 330K	1	
R104	ERJ3GEYJ223	M.RESISTOR CH 1/16W 22K	1	
R105	ERJ8GCYJ102	M.RESISTOR CH 1/8W 1K	1	
R200	ERJ6GEYG752	M.RESISTOR CH 1/10W 7.5K	1	
R201	ERJ6GEYG242	M.RESISTOR CH 1/10W 2.4K	1	
R202	ERJ6GEYG821	M.RESISTOR CH 1/10W 820	1	
R203	ERJ6GEYG752	M.RESISTOR CH 1/10W 7.5K	1	
R204	ERJ6GEYG242	M.RESISTOR CH 1/10W 2.4K	1	
R205	ERJ6GEYG821	M.RESISTOR CH 1/10W 820	1	
SW200	VSS023706	SWITCH	1	
VR1	EVMEGSA00B24	V.RESISTOR 20K	1	
VR2	EVMEGSA00B54	V.RESISTOR 50K	1	
■E28	VEP80856A	CARRIGE P.C.BOARD	1	(RTL)
P1	VJP1249T	CONNECTOR (MALE) 9P	1	
P2	VJS2889A012	CONNECTOR (FEMALE)	1	
P3	VJS2889A016	CONNECTOR (FEMALE)	1	
R1-R7	ERDS2TJ221	C.RESISTOR 1/4W 220	7	